HESAI

www.hesaitech.com

XT32M2X

32-Channel Mid-Range Mechanical Lidar User Manual

Classification: C0 (Public)

Doc version: X03-en-251110

Table of Contents

■ **About this manual** 1
Access to this manual 1
Technical support 1
Legends and format 1
■ **Safety notice** 2
Special warnings 2
Operating environment 3
Personnel 5
Installation and operation 5
Repair 9
1. Introduction 10
1.1. Applicability 10
1.2. Operating principle 10
1.3. Basic structure 11
1.4. Channel distribution 12
1.5. Specifications 13
1.5.1. Ranging accuracy 16
1.5.2. Ranging precision 18
2. Setup 19
2.1. Mechanical installation 19
2.2. Exterior dimensions 19
2.2.1. Recommended Installation 21
2.2.2. Notes on screw installation 22
2.3. Electrical interface 23
2.3.1. Pin description 23

2.3.2. Cables (Ethernet) 24
2.3.3. Connector use 25
2.4. Connection box (optional) 27
2.4.1. Ports 28
2.4.2. Connection 30
2.5. Network settings on the host computer 32
2.5.1. In Windows 33
2.5.2. In Ubuntu 36
2.6. Tools 39
3. Data structure 40
3.1. Point Cloud Data Packet 41
3.1.1. Ethernet Header 41
3.1.2. Point cloud UDP data 42
3.1.3. Ethernet tail 48
3.1.4. Point cloud data analysis method 49
3.2. GNSS Data Packet 52
3.2.1. Ethernet Header 52
3.2.2. GNSS UDP data 53
3.2.3. Ethernet tail 56
3.2.4. GNSS time data analysis method 57
4. Web Control 58
4.1. Home 59
4.2. Settings 61
4.2.1. Network 63
4.2.2. Function 64
4.2.3. Time sync 66
4.3. Azimuth FOV 70

4.3.1. For all channels 71
4.3.2. Multi-section FOV 71
4.4. Operation statistics 72
4.5. Upgrade 73
5. Maintenance 74
6. Troubleshooting 76
Appendix A: Channel distribution data 80
Appendix B: Absolute time of point cloud data 82
B.1. Source of absolute time 82
B.1.1. GNSS as the clock source 82
B.1.2. PTP as the clock source 83
B.2. Absolute time of the Point Cloud Data Packets 85
B.3. Start time of each block 85
B.4. Laser firing time of each channel 86
Appendix C: Power supply requirements 87
C.1. Input voltage 87
C.1.1. Estimate the cable voltage drop 87
C.1.2. Avoid overvoltage 88
C.2. Input power 89
C.3. Power up/down 89
Appendix D: Nonlinear reflectivity mapping 90
Appendix E: Legal notice 95

About this manual

Please make sure to read through this user manual before your first use and follow the instructions herein when you operate the product. Failure to comply with the instructions may result in product damage, property loss, personal injuries, and/or a breach of warranty.

Access to this manual

To obtain the latest version, please do one of the following:

- Visit the Download page of Hesai's official website: https://www.hesaitech.com/downloads/
- Contact your sales representative of Hesai.
- Contact Hesai technical support at service@hesaitech.com.

Technical support

If your question is not addressed in this user manual, please contact us at:

- service@hesaitech.com
- https://www.hesaitech.com/technical-support/
- https://github.com/HesaiTechnology

Legends and format

Warnings: Instructions that must be followed to ensure safe and proper use of the product.

Notes: Additional information that may be helpful.

Names of data fields are in monospace font.

For example: `Distance` represents the Distance field.

Safety notice

- Please make sure to read through this safety notice and follow all the instructions and warnings. Failure to comply with the instructions and warnings may result in product damage, property loss, and/or personal injuries.
- Please check the certification information on the product's nameplate. If an agreement has been made not to present certification information on the nameplate, please follow the agreed-to arrangements.
- If you incorporate this lidar product into your product(s), you are required to provide this user manual (or access to this user manual) to the intended users of your product(s).
- This lidar product is intended as a component of an end product. The end-product supplier is responsible for assessing the risk of use in accordance with applicable standards and informing the intended user of safety-related information.
- Should there be other agreements with specific users, the other agreements shall apply.
- Before using a product, please confirm with Hesai the development maturity of the product in a timely manner. For products still in development, Hesai makes no warranty of non-infringement nor assumes any responsibility for quality assurance.

Special warnings

Laser safety

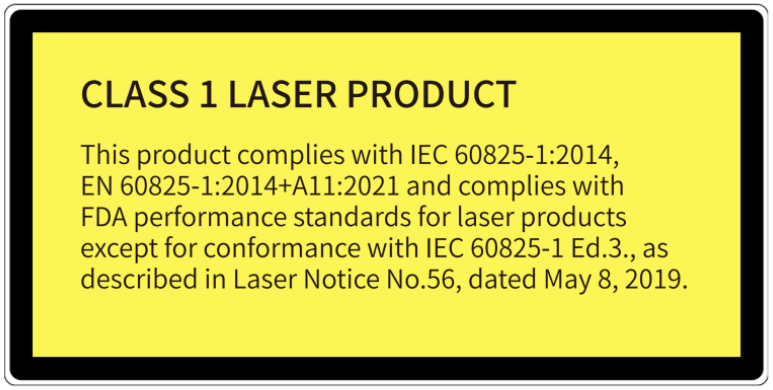

Hot surface

Hot parts!
Burned fingers when handling the parts.
Wait one-half hour after switching off before handling the parts.

Abnormalities

In any of the circumstances listed below, stop using the product immediately:

- If you suspect malfunctions of or damage to the product, with symptoms such as noticeable noise or vibration.
- If you or people in the nearby environment feel discomfort.
- If any device or equipment in the nearby environment malfunctions.

Meanwhile, contact Hesai or an authorized Hesai service provider for more information on product disposal.

Prohibition of disassembly

Unless expressly agreed to in writing by Hesai, do NOT disassemble the product.

Operating environment

Radio frequency (RF) interference

- Before using the product, make sure to read all the signs and notices on the product enclosure (including the nameplate). If specific users require not presenting certification information on the nameplate, please follow the agreed-to arrangements.
- Although the product is designed, tested, and manufactured to comply with the regulations on RF radiation (such as FCC, CE-EMC, or KCC), the radiation from the product may still influence electronic devices.

Vibration

- If significant mechanical shocks and vibration exist in the product's operating environment, please contact Hesai's technical support to obtain the shock and vibration limits of your product model. Exposure to over-the-limit shocks or vibration may damage the product.
- Make sure to package the product in shock-proof materials to avoid damage during transport.

Explosive atmosphere and other air conditions

- Do NOT use the product in any area where a potentially explosive atmosphere is present, such as where the air contains high concentrations of flammable chemicals, vapors, or particulates (including particles, dust, and metal powder).
- Do NOT expose the product to environments that have high concentrations of industrial chemicals, including liquefied gases that are easily vaporized (such as helium). Such exposure can damage or impair product functionality.

Chemical environment

Do NOT expose the product to corrosive or strong polar chemical environments (such as liquids or gases), including but not limited to strong acids, strong bases, esters, and ethers. This is to avoid damage to the product (including but not limited to water resistance failure).

Ingress protection (IP)

Please check the product's user manual for its IP rating (refer to Section 1.5 Specifications). Make sure to avoid any ingress beyond that rating.

Operating temperature

Please check the product's user manual for its operating temperature (refer to Section 1.5 Specifications). Make sure not to exceed the operating temperature range.

Recommended storage conditions

Please store the product in a dry and well-ventilated place. The recommended ambient temperature is 23 ± 5°C, with relative humidity between 30% and 70% RH.

Light interference

Certain precision optical instruments may interfere with the laser light emitted from the product. Please check all the instructions for these instruments and take preventive measures if necessary. For example, protective leather covers are provided for certain product models; when these lidars are temporarily not used for measurement, the leather covers can be applied to block laser light emission.

Personnel

Recommended operator qualifications

The product should be operated by professionals with an engineering background or experience in operating optical, electrical, and mechanical instruments. Always follow the instructions in this manual throughout operation. If needed, please contact Hesai for technical support.

Medical device interference

- Some components in the product can emit electromagnetic fields. If the product operators or people in the nearby environment wear medical devices (such as cochlear implants, implanted pacemakers, and defibrillators), make sure to consult the physicians and medical device manufacturers for medical advice, such as determining whether a safe distance from the product is required.
- If you suspect that the product is interfering with your medical device, stop using the product immediately.

Installation and operation

Power supply

- Before powering on the product, make sure the electrical interfaces are dry and clean. Do NOT power on the product in a humid environment.
- Do NOT use damaged or out-of-spec cables or adapters.
- You are recommended to use only the cables and power adapters provided by Hesai. If you are to design, configure, or select the power supply system (including cables) for the product, make sure to comply with the electrical specifications in the product's user manual (refer to Section 1.5 Specifications and the Power Supply Requirements section if available); for technical support, please contact Hesai.
- Please check Section 2.3 Electrical interface and strictly follow the instructions on plugging/unplugging the connector. If abnormalities already exist (such as bent pins, broken cables, and loose threads), stop using the product and contact Hesai technical support.

Eye safety

The product is a Class 1 laser product. It satisfies the requirements of:

- IEC 60825-1:2014
- EN 60825-1:2014+A11:2021
- 21 CFR 1040.10 and 1040.11 except for deviations (IEC 60825-1 Ed.3) pursuant to Laser Notice No.56, dated May 8, 2019.

CAUTION: Use of controls or adjustments or performance of procedures other than those specified herein may result in hazardous radiation exposure.

CAUTION

- For maximum self-protection, it is strongly warned that users do NOT look into the transmitting laser through a magnifying product (microscope, eye loupe, magnifying glass, etc.).
- This product does not have a power switch. It starts operating once connected to power. During operation, the entire cover lens can be regarded as the product's laser emitting window; looking at the cover lens can be regarded as looking into transmitting laser.

Product enclosure

- Do NOT crush or puncture the product. If the product enclosure is broken, stop using it immediately and contact Hesai technical support.
- Certain product models contain high-speed rotating parts. To avoid potential injuries, do NOT operate the product if the enclosure is loose.
- If the product enclosure consists of fins or grooves, please wear gloves when handling the product. Applying too much pressure with your bare hands may cause cuts, bruises or other injuries.

Drops and burns

The product contains metal, glass, and plastic, as well as sensitive electronic components. If the product is dropped or burnt, stop using it immediately and contact Hesai technical support.

Cover lens

The location of the cover lens is illustrated in Section 1 Introduction.

- Do NOT apply protective film, wax or any other substance on the cover lens.
- To keep the product's cover lens from fingerprints and other stains, do NOT touch the cover lens with bare hands. If the cover lens is already stained, please refer to the cleaning method in Section 5 Maintenance.
- To prevent scratches, do NOT touch the product's cover lens with hard or sharp objects. If scratches already exist, stop using the product and contact Hesai technical support. Severe scratches may affect the quality of the product's point cloud data.

Mounting

- Before operating the product, make sure it is properly and securely mounted. The mounting should prevent the product from leaving its mounting position under external forces (such as collisions, high winds, and stone impacts).
- Before installing any exterior part, please ensure that each exterior part and its movable area do not overlap the Field of View (FOV) of the lidar.

The FOV of lidar is the spatial angular range bounded by the horizontal and vertical FOV ranges (see Section 1.5 Specifications); the distance to the origin of the lidar's coordinate system is not limited. For inquiries about the FOV, please contact Hesai technical support.

Hot surface

During operation or the time period after the operation, the product's enclosure can be hot.

- To prevent discomfort or even burns, do NOT touch the product's enclosure with your skin.
- To prevent fires, make sure to keep flammable materials away from the product's enclosure.

Certain product models support active heating of the cover lens to reduce the impact of ice and frost.

- While active heating is ON, the cover lens can be hot. To prevent discomfort or even burns, avoid direct skin contact with the cover lens.
- When the cover lens is free of ice and frost, you may turn off active heating.

Peripherals

The product may be used along with accessories and devices, such as suction cup mounts, extension cables, power supplies, network devices, GNSS/PTP devices, CAN transceivers, and cleaning equipment.

When selecting a peripheral, please refer to all relevant specifications in the product's user manual or contact Hesai technical support. Using out-of-spec or unsuitable devices may result in product damage or even personal injuries.

Firmware and software upgrading

Make sure to use only the upgrade files provided by Hesai. Make sure to observe all the instructions provided for that upgrade file.

Customized firmware and software

- Before using a customized version of firmware and software, please fully understand the differences in functions and performance between the customized version and the standard version.
- Make sure to strictly follow all the instructions and safety precautions provided for that customized version. If the product does not function as anticipated, stop using the product immediately and contact Hesai technical support.

Point cloud data processing

- Certain product models support one or more point cloud data processing functions, including but not limited to: Noise Filtering, Interstitial Points Filtering, Retro Multi-Reflection Filtering, and Non-Linear Reflectivity Mapping.
- These functions are configurable and are intended only to assist the user in extracting information from the point cloud data. Users are in full control of whether to use any of these functions. Moreover, users are responsible for analyzing the product's intended application scenarios and evaluating the risk of enabling one or more of these functions in combination.
- To learn about the supported functions of a product model, please contact Hesai technical support.

Repair

- Unless expressly agreed to in writing by Hesai, do NOT disassemble, repair, modify, or alter the product by yourself or through any third party. Such a breach:
  - can result in product damage (including but not limited to water resistance failure), property loss, and/or injuries;
  - shall constitute a breach of warranty.
- For more product repair issues, please contact Hesai or an authorized Hesai service provider.

1. Introduction

1.1. Applicability

This manual applies to the following versions:

Software	2.1.20 or later
Firmware of Sensor	2.1.7 or later
Firmware of Controller	2.0.18 or later

1.2. Operating principle

Distance measurement: Time of Flight (ToF)

1. A laser diode emits a beam of ultrashort laser pulses onto the target object.
2. The laser pulses are reflected after hitting the target object. The returning beam is detected by an optical sensor.
3. Distance to the object can be accurately measured by calculating the time between laser emission and receipt.

$d = \frac{ct}{2}$	d: Distance c: Speed of light t: Travel time of the laser beam

1.3. Basic structure

The basic structure is shown in Figure 1.
Multiple pairs of laser emitters and receivers are attached to a motor that rotates 360° horizontally.

Figure 1. Partial cross-sectional diagram

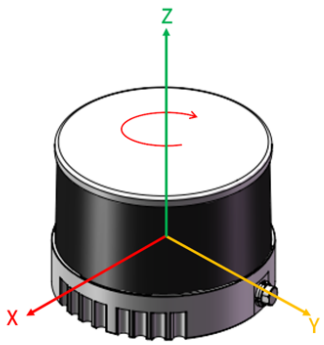

Figure 2. Coordinate system (isometric view)

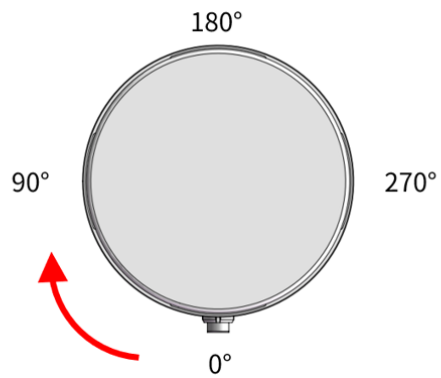

Figure 3. Lidar azimuthal position (top view)

The lidar's coordinate system is illustrated in Figure 2.

- Z-axis is the axis of rotation.

The lidar's azimuthal position is defined in Figure 3.

- Y-axis corresponds to 0°.
- Each laser channel has an intrinsic azimuth offset. All channels are selected to define the lidar's azimuthal position.

For example, when all channels pass the 90° position:

- the lidar is at the 90° position;
- the `Azimuth` field in the corresponding data block in the Point Cloud Data Packet will be 90°.

1.4. Channel distribution

The vertical resolution is 1.3° across the FOV, as illustrated in Figure 4.

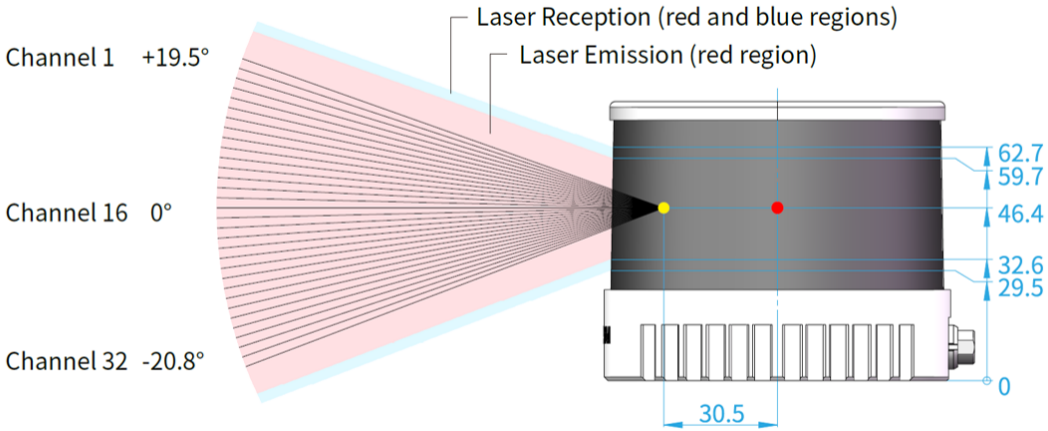

Figure 4. Channel vertical distribution (unit: mm)

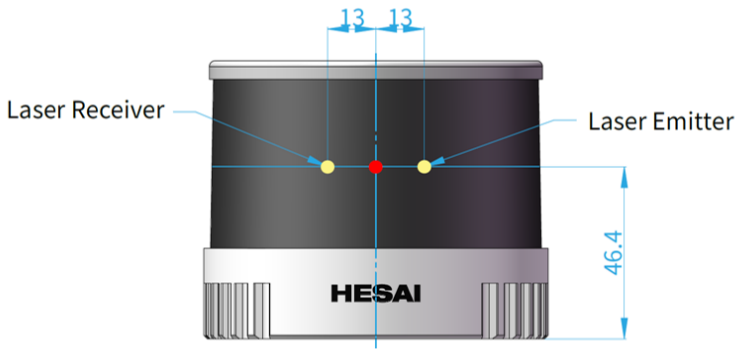

Figure 5. Laser emitter/receiver position (unit: mm)

- The optical center's exact position is shown as a yellow dot.
- The origin's exact position is shown as a red dot. All measurements are relative to the origin.

Each channel has an intrinsic vertical angle offset.
These angles are recorded in the angle correction file of this lidar, which is provided when shipping.

Get the angle correction file

Use one of these ways:

- Send PTC command 0x05; see the TCP API Reference Manual.
- Export the file using PandarView 2; see the PandarView 2 User Manual.
- Ask Hesai technical support or your sales representative.

1.5. Specifications

SENSOR

Scanning method	Mechanical rotation
Number of channels	32
Instrumented range	0.5 to 300 m (all channels)
Ranging capability ①	80 m @10% reflectivity (all channels)
Ranging accuracy ②	±1 cm
Ranging precision ③	0.5 cm (1σ, typical) 1 cm (standard)
Horizontal FOV	360°
Horizontal resolution	0.09° (5 Hz) 0.18° (10 Hz) 0.36° (20 Hz)
Vertical FOV	40.3° (-20.8° to +19.5°)
Vertical resolution	1.3°
Frame rate	5 Hz, 10 Hz, 20 Hz
Return mode	**Single Return:** Last/Strongest/First **Dual Return:** Last and Strongest, Last and First, First and Strongest **Triple Return:** Last, Strongest, and First (default)

MECHANICAL/ELECTRICAL/OPERATIONAL

Wavelength	905 nm
Laser class	Class 1 Eye Safe

Ingress protection	IP6K7
Dimensions	Height: 75.0 mm Top/Bottom: Φ89.0/93.0 mm
Rated voltage range	DC 9 to 36 V
Power consumption ④	10 W
Operating temperature	-20°C to 60°C
Storage temperature	-40°C to 85°C
Weight	490 g

DATA I/O

Data transmission	Ethernet 100BASE-TX, Slave Mode
Measurements	Distance, azimuth angle, and reflectivity
Data points	**Single Return:** 640 000 pts/sec **Dual Return:** 1 280 000 pts/sec **Triple Return:** 1 920 000 pts/sec
Point cloud data rate	**Single Return:** 23.09 Mbps **Dual Return:** 46.18 Mbps **Triple Return:** 69.28 Mbps
Clock source	GNSS/PTP (1588v2, 802.1AS, 802.1AS Automotive)
PTP clock accuracy ⑤	⩽1 μs
PTP clock drift ⑥⑤	⩽1 μs/s

Specifications are subject to change. Please refer to the latest version of this manual.

Notes to specifications

① Ranging capability Typical value

Measured under 100 klux ambient illuminance with the probability of detection (PoD) > 90%.

②③ Ranging accuracy and precision

- Defined as the average of all channels.
- May vary with range, temperature, and target reflectivity.
- Typical values: the average values of all channels, measured outdoors within 0.5 to 50 m under 30°C ambient temperature with a target reflectivity of 50%.
- Standard values: the average values of all channels, measured indoors at 3/7/15/25 m under room temperature with target reflectivities between 5% and 65%.

④ Power consumption

Typical value

- Test conditions: room temperature, 12 V (lidar input voltage), and 600 RPM (spin rate).
- Not including accessories such as the connection box.
- The external power supply should be able to provide at least 30 W.

⑤⑥ PTP clock accuracy and clock drift

Typical value
Test condition: room temperature

⑥ PTP clock drift

Defined as the drift at a constant temperature after the lidar (slave clock) loses connection to the PTP master.

1.5.1. Ranging accuracy

Definition: average error of the multiple measurements made by one channel, at each specified target distance

Measurement error: difference between the measured value and the true value

Conditions: 30°C ambient temperature; outdoors; all channels

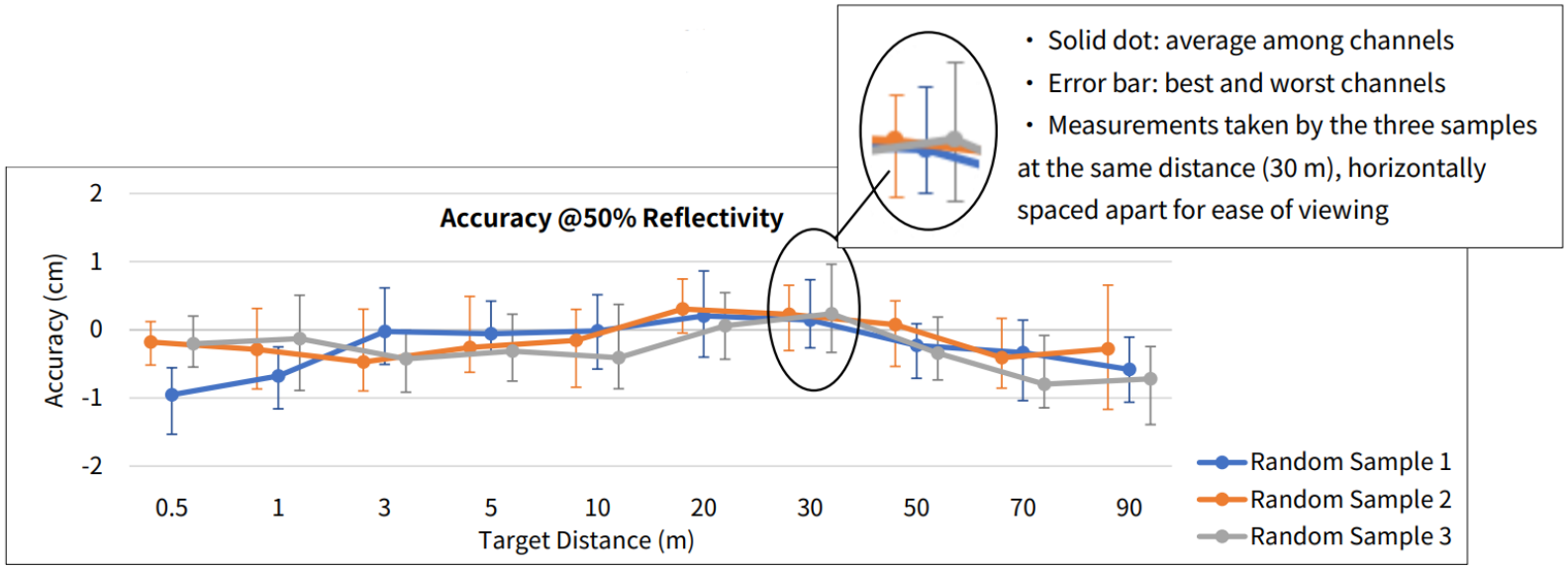
Accuracy @50% Reflectivity
Accuracy (cm)
2
1
0
-1
-2
0.5
1
3
5
10
20
30
50
70
90
Target Distance (m)
Random Sample 1
Random Sample 2
Random Sample 3
• Solid dot: average among channels
• Error bar: best and worst channels
• Measurements taken by the three samples at the same distance (30 m), horizontally spaced apart for ease of viewing

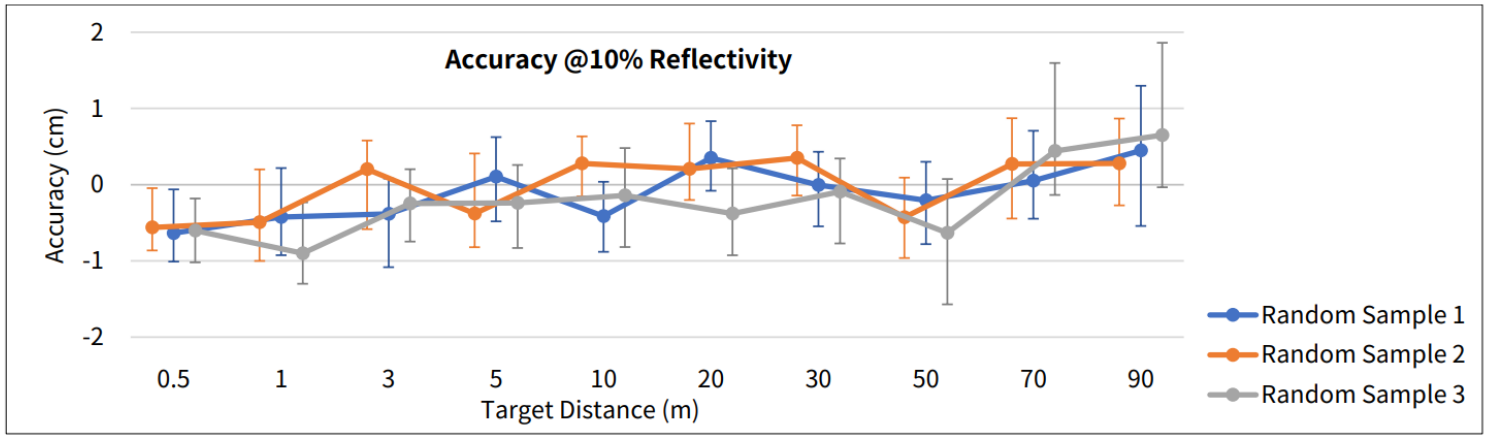
Accuracy @10% Reflectivity
Accuracy (cm)
2
1
0
-1
-2
0.5
1
3
5
10
20
30
50
70
90
Target Distance (m)
Random Sample 1
Random Sample 2
Random Sample 3

1.5.2. Ranging precision

Definition: standard deviation of the multiple measurements made by one channel, at each specified target distance

Conditions: 30°C ambient temperature; outdoors; all channels

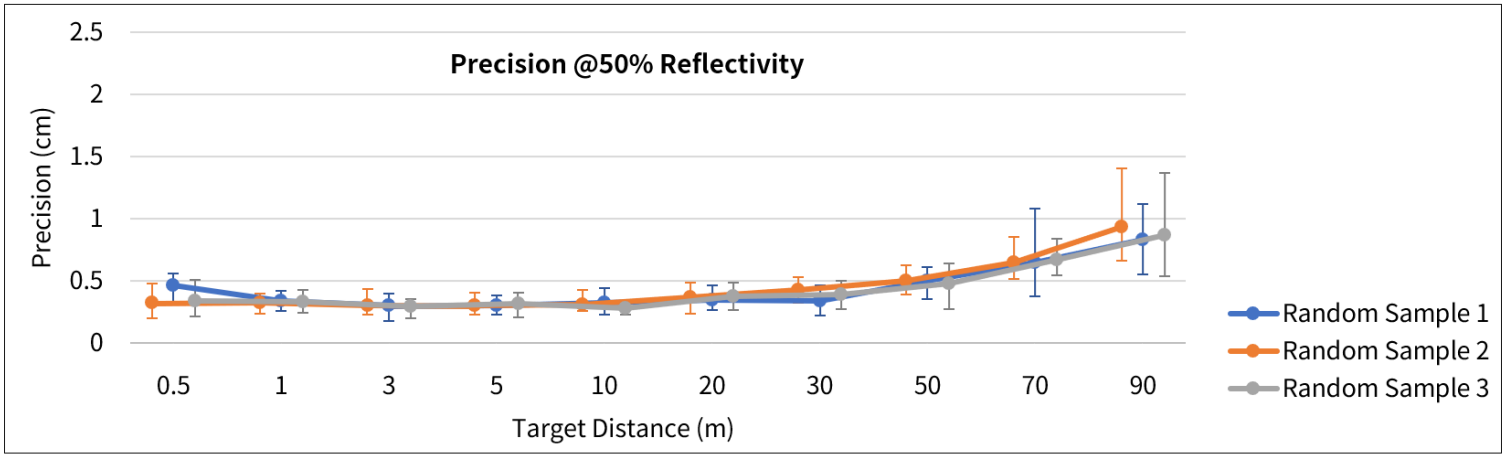

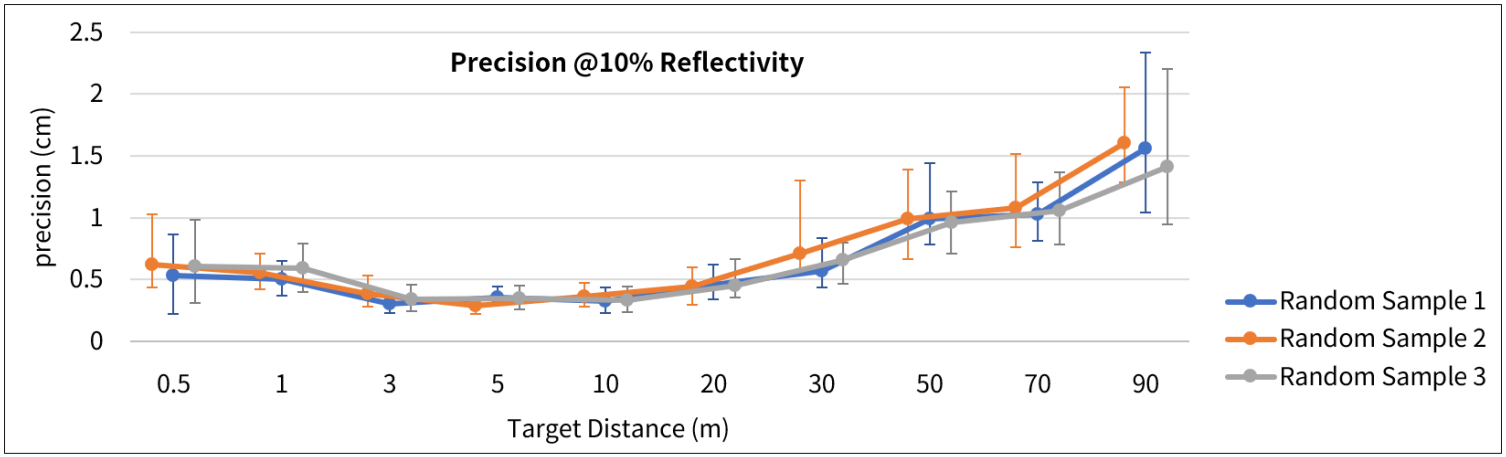

2. Setup

Before operating the lidar, strip away the protective cover on the cover lens.

> The information in this section may be different for customized models. The mechanical drawings and data exclusively provided for customized models shall prevail.

2.1. Mechanical installation

2.2. Exterior dimensions

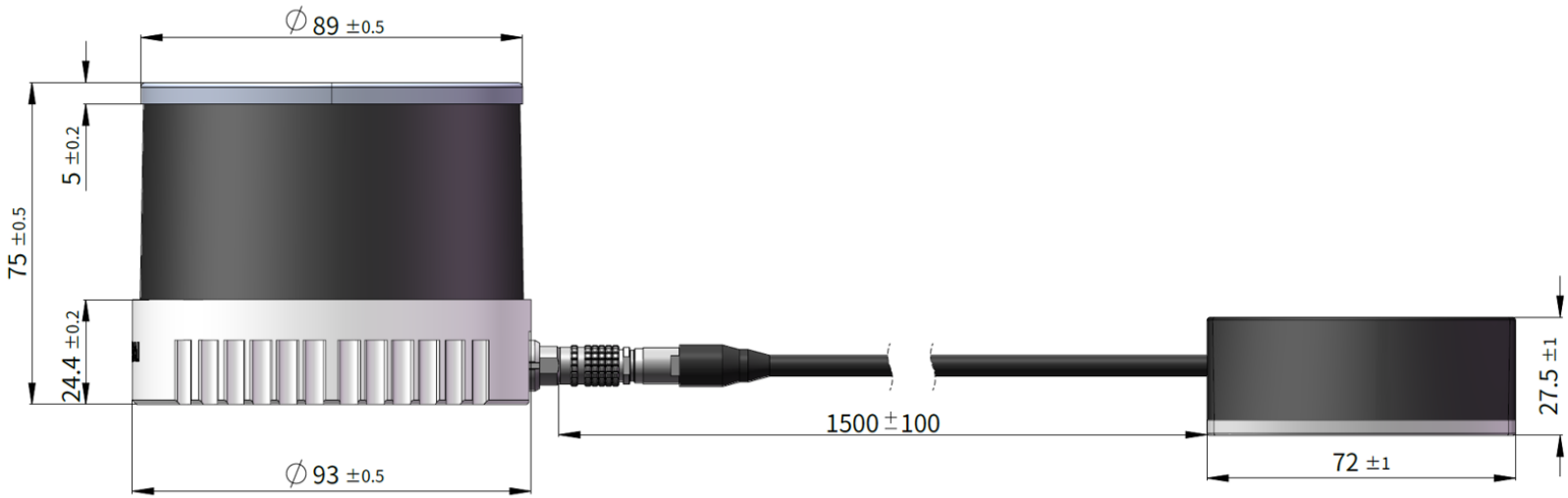

Figure 6. Front view (unit: mm)

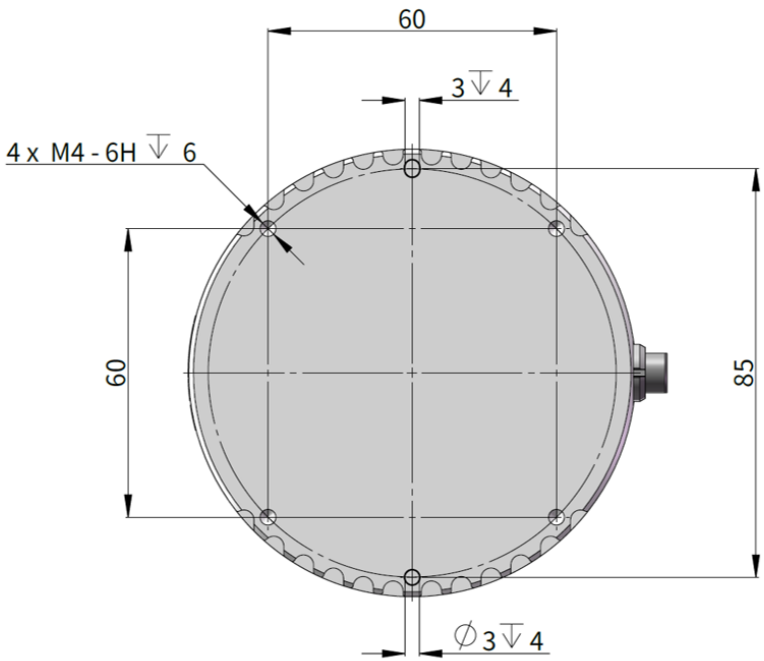

Figure 7. Bottom view (unit: mm)

2.2.1. Recommended Installation

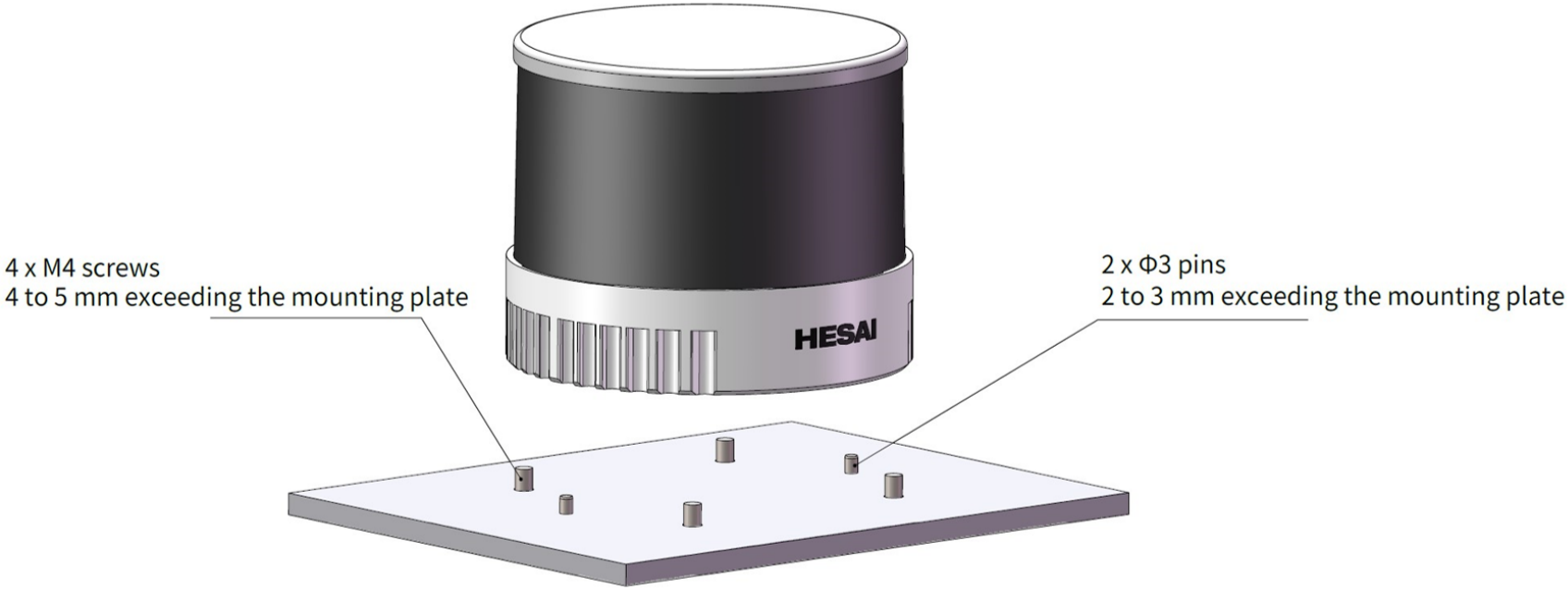

Figure 8. Recommended installation

2.2.2. Notes on screw installation

Screw type

SEMS screws (with pre-attached flat washers and lock washers) are recommended. Property class should be at least 4.8.

Threadlocker

Before fastening a screw, apply 1 or 2 dots of threadlocker in the thread fit area. LOCTITE® 263 Threadlocker is recommended.
To ensure curing it in place, wait for at least 12 hours before operating the lidar.

Screw torque

The base material of the threaded holes is aluminum alloy instead of steel. Refer to the following table for the appropriate screw torque.

Thread size	Recommended screw torque
M2	0.2 to 0.3 Nm
M3	0.5 to 0.6 Nm
M4	1 to 1.5 Nm
M5	2 to 2.5 Nm
M6	3.5 to 4 Nm

Thread service life

25 times. (Each screwing counts as one time, so as each unscrewing.)

2.3. Electrical interface

Lemo part number: EEG.0T.309.CLN (female socket, on the lidar)

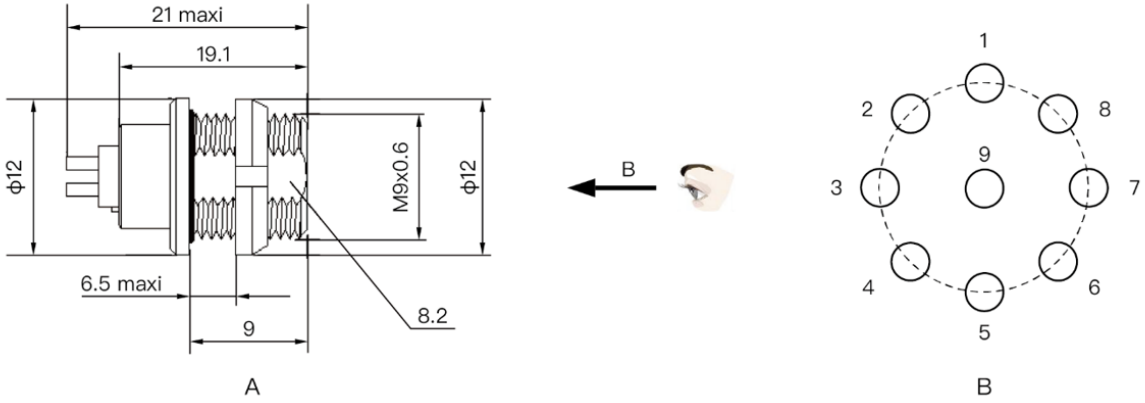

Figure 9. Lemo connector (unit: mm)

2.3.1. Pin description

Pin number	Signal	Wire color	Voltage	Wire gauge	Pin number	Signal	Wire color	Voltage	Wire gauge
1	GNSS PPS	Black	3.3 to 12 V	28 AWG	6	Ethernet TX-	Green	-1 to 1 V	28 AWG
2	GNSS NMEA	Purple	-13 to 13 V	28 AWG	7	Ethernet RX+	Pink	-1 to 1 V	28 AWG
3	GND	Brown	0 V	26 AWG	8	Ethernet RX-	Gray	-1 to 1 V	28 AWG
4	VIN	White	9 to 36 V	26 AWG	9	Reserved	Red	-	-
5	Ethernet TX+	Yellow	-1 to 1 V	28 AWG	-	-	-	-	-

- The blue wire is not used.
- For a GNSS PPS signal, the recommended pulse width is over 1 ms, and the cycle is 1 s (rising edge to rising edge).

Timing requirements of GNSS signals (PPS and NMEA)

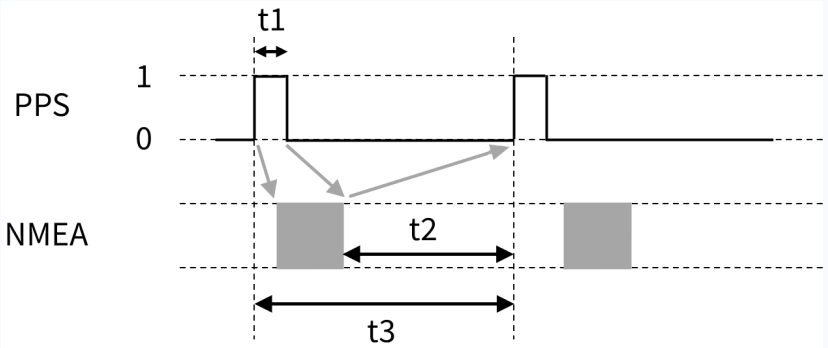

Cycle of the PPS signal	t3 = 1 s ± 50 µs (rising edge to rising edge)
Pulse width of the PPS signal	t1 ⩾ 1 ms Recommended range: 10 to 100 ms
Timing relationship	As indicated by the gray arrows, the NMEA signal: • Should **start** after the PPS **rising** edge of the current second. • Should **end** after the PPS **falling** edge of the current second. • Should **end** before the PPS **rising** edge of the **next** second; t2 ⩾ 100 ms.

2.3.2. Cables (Ethernet)

Outer diameter (OD) = 5.0 ± 0.20 mm
Minimum bend radius = 10 × OD

2.3.3. Connector use

- Before connection, check the pins on the socket and the holes on the plug. In case of bent pins or damaged holes, stop using the connector and contact technical support.
- To prevent breakdowns, turn off the power source before connection and disconnection.
- Do NOT attempt to force open a connection by pulling on the cables or by twisting the connectors in any way. Doing so can loosen the connectors' shells, or even damage the contacts.
- If the connector's shell is accidentally pulled off, stop using the connector and contact Hesai technical support. Do NOT attempt to assemble the connector's shell and cable collet; do NOT connect a connector without its shell. Doing so may damage the lidar's circuits.
- For further troubleshooting, please contact Hesai technical support or obtain work instructions from the connector manufacturer.
- The connector is designed to withstand at least 1000 mating cycles; exceeding this number may increase the risk of connector damage.

Connection	1. Turn off the power source. 2. Make sure the red dot on the cable's plug faces upward so that the alignment key matches the slot on the lidar side. 3. Push the plug straight into the lidar's socket.
Disconnection	1. Turn off the power source. 2. Hold the plug's shell and pull the plug straight from the socket.

Figure 10. Connector use

2.4. Connection box (optional)

Users may connect the lidar with or without a connection box.

Lemo part number: FGG.0T.309.CLAC50Z (male plug, on the connection box)

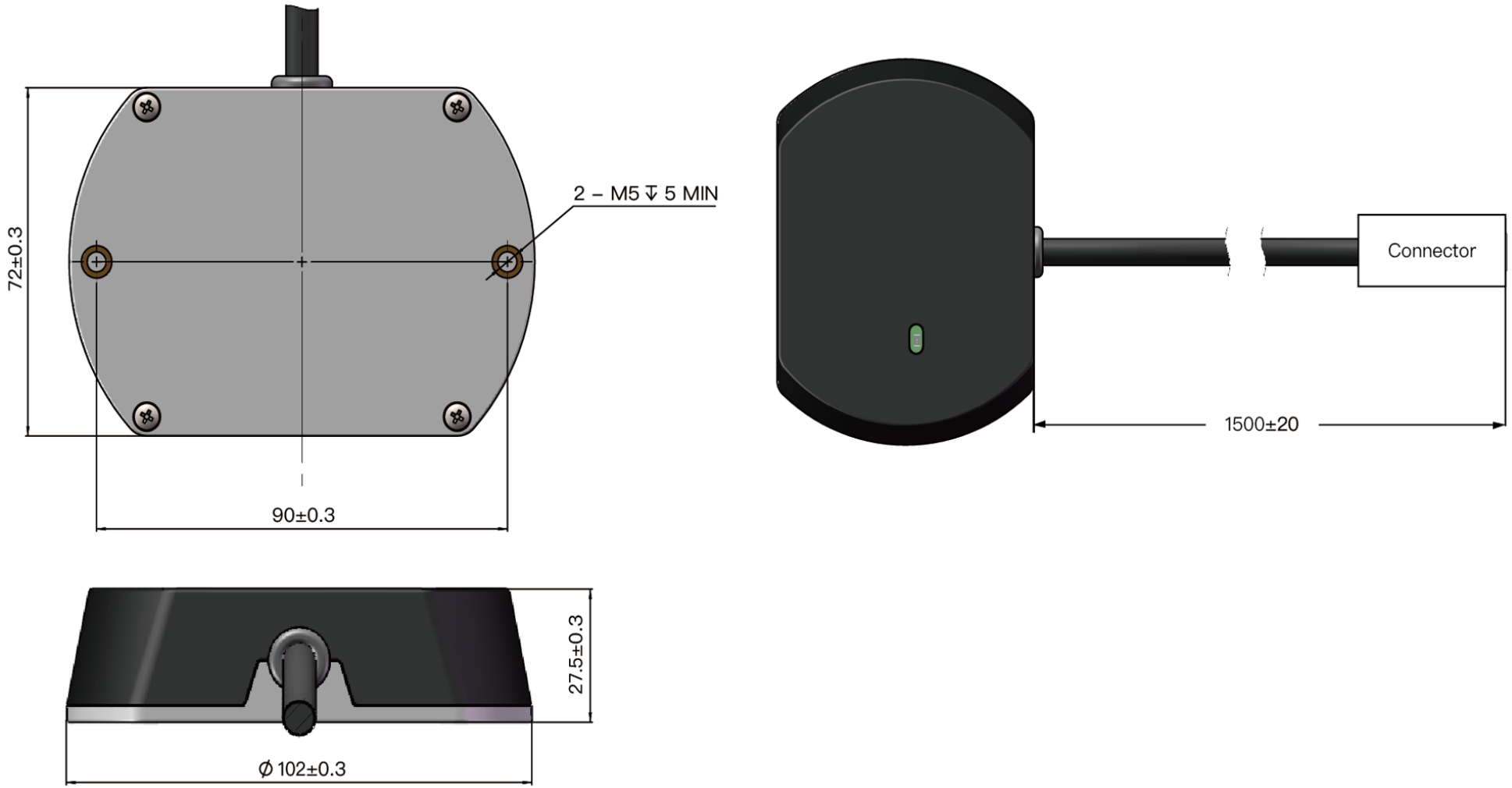

Figure 11. Connection box (unit: mm)

2.4.1. Ports

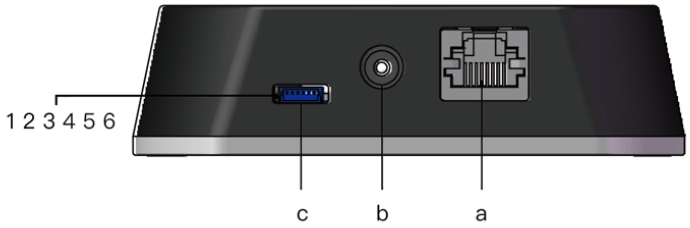

Figure 12. Connection box (front)

Port number	Port name	Description
a	Standard Ethernet port	RJ45, 100 Mbps Ethernet
b	Power port	Connects to a DC power adapter.
c	GNSS port	Connector part number: JST SM06B-SRSS-TB Recommended connector for the external GNSS module: JST SHR-06V-S-B Voltage standard: RS232 Baud rate: 9600 bps

Pin description for the GNSS port

Pin number	Direction	Signal	Descriptions
1	Input	Pulse-per-second (PPS) signal for synchronization	3.3 to 12 V Rising edge ⩽ 500 ns Recommended pulse width ⩾ 1 ms Cycle: 1 s (from rising edge to rising edge)
2	Output	Power for the external GNSS module	5 V
3	Output	Ground for the external GNSS module	-

Pin number	Direction	Signal	Descriptions
4	Input	Receiving serial data from the external GNSS module	RS232 level
5	Output	Ground for the external GNSS module	-
6	-	Reserved	-

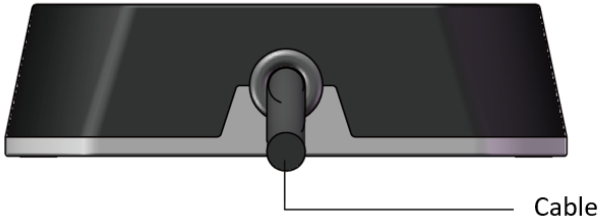

Figure 13. Connection box (back)

2.4.2. Connection

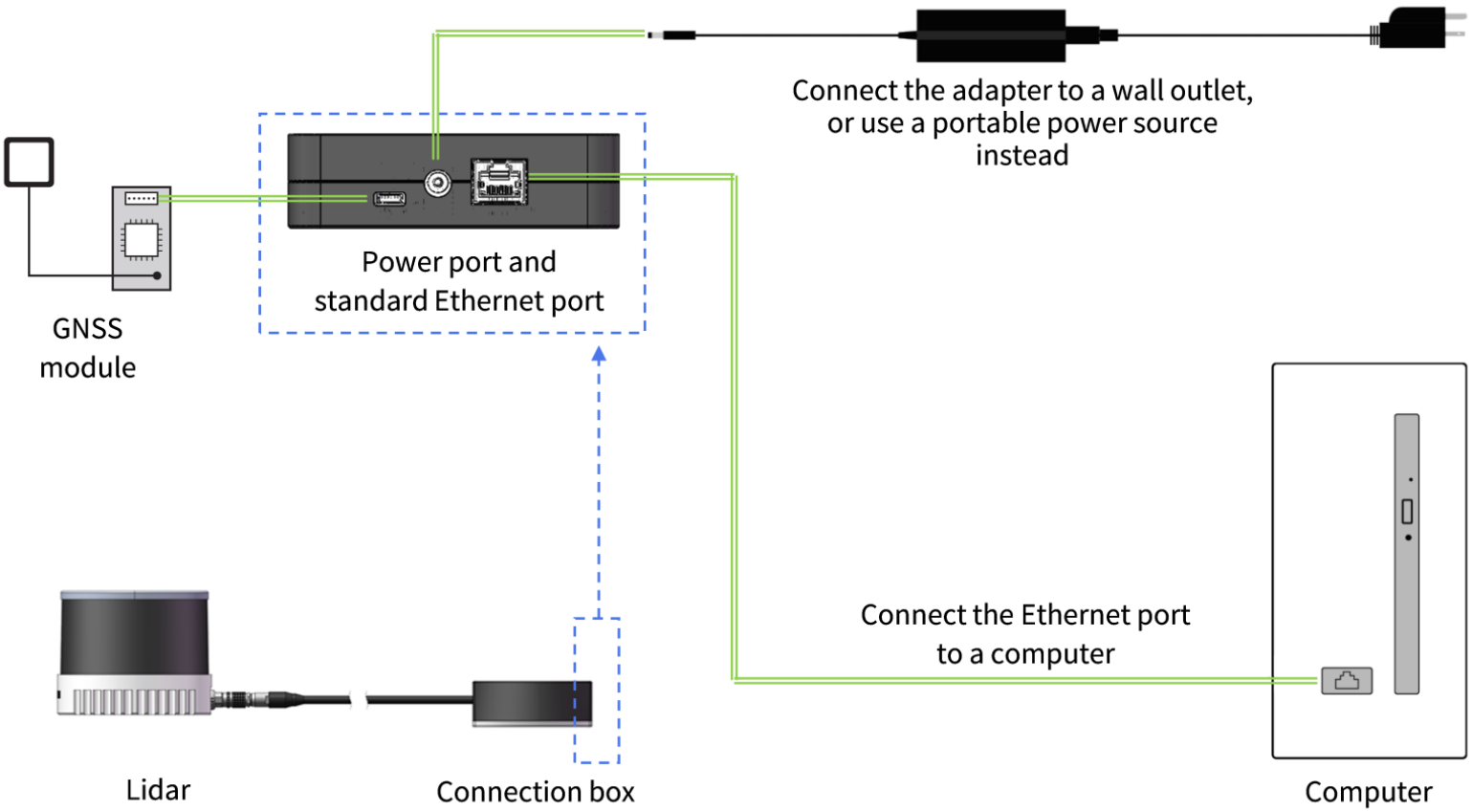

Figure 14. Connection with GNSS

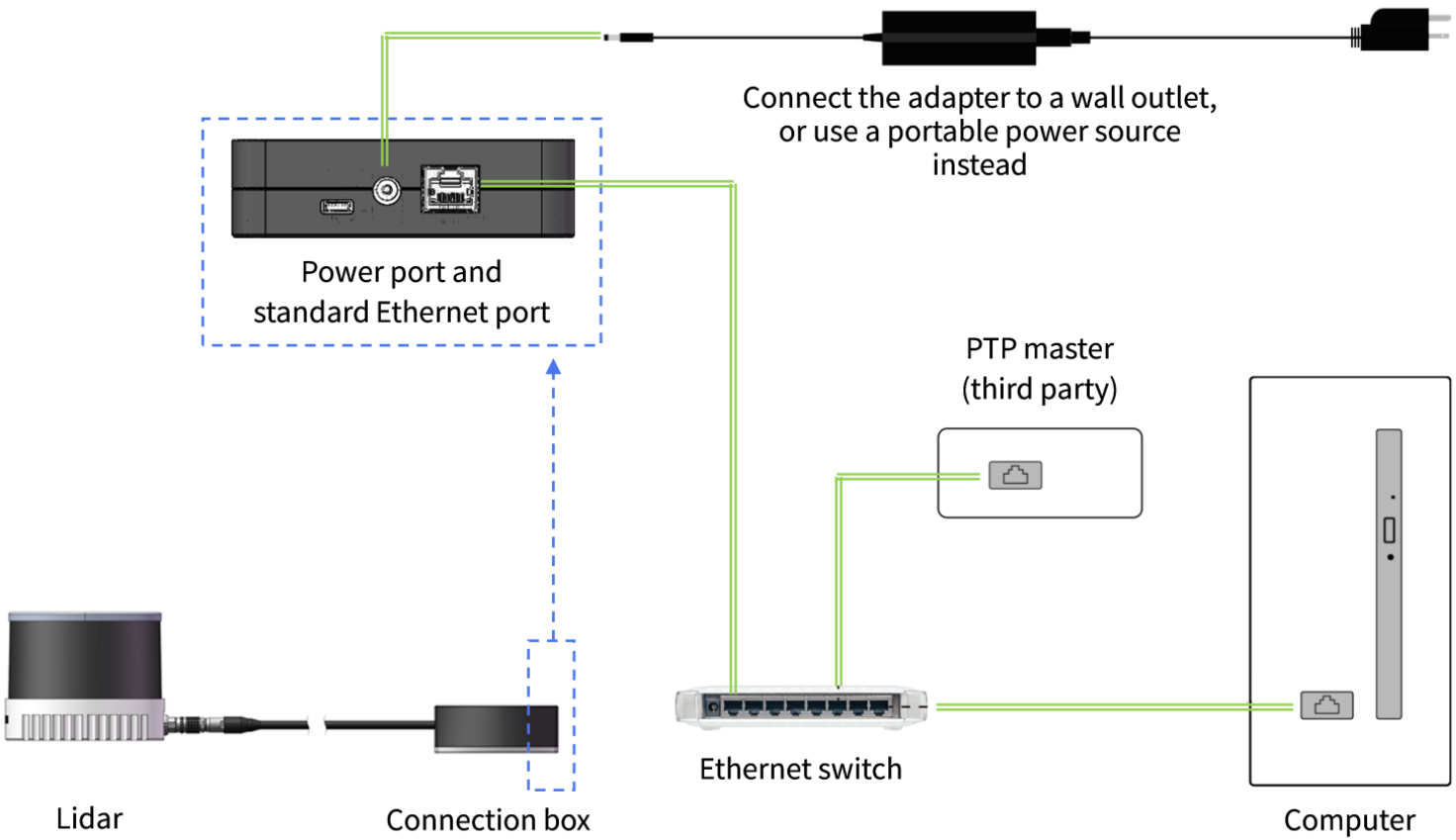

Figure 15. Connection with PTP

2.5. Network settings on the host computer

The lidar has no power switch. It starts transmitting data when both of these conditions are met:

- The lidar is connected to power.
- The lidar is connected to a host computer via Ethernet.

To analyze point cloud data, configure the network parameters of the host computer:

Network parameters	Value	Description
IP address	192.168.1.**X**	**X** can be selected from 2 to 200 and from 202 to 254.
Subnet mask	255.255.255.0	-
VLAN ID	Range: 1 to 4094	Required only when VLAN tagging is used. Make sure the host computer and the lidar use the same VLAN ID.

2.5.1. In Windows

1. [**Control Panel**] > [**Network and Internet**] > [**Network and Sharing Center**] > [**Change adapter settings**].
2. Right-click [**Ethernet**] or [**Ethernet X**] which shows Ethernet connection (with no red cross at the bottom left of the icon) > Select [**Properties**].

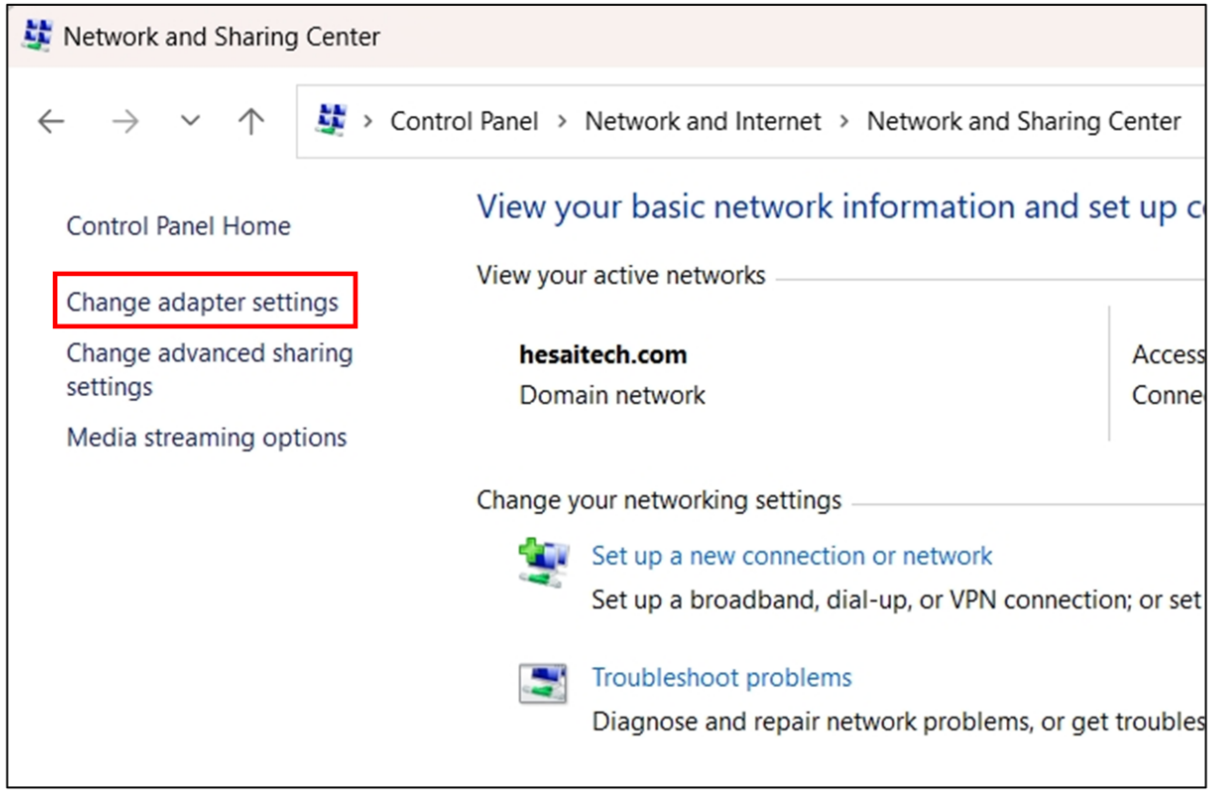

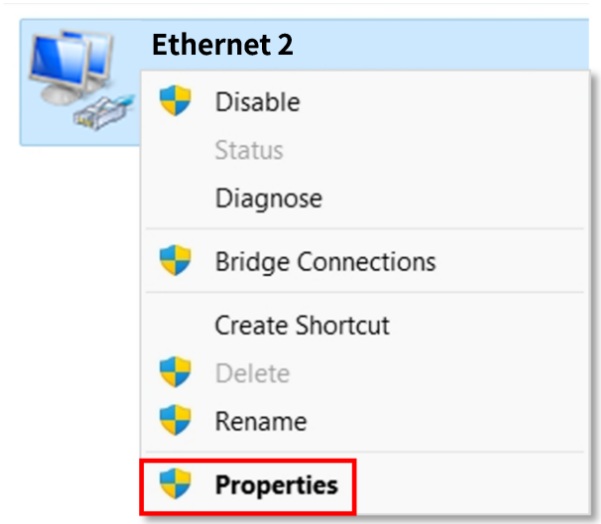

3. Double-click [**Internet Protocol Version 4 (TCP/IPv4)**].
4. Select [**Use the following IP addresses**] > Input the host computers's IP address and subnet mask.

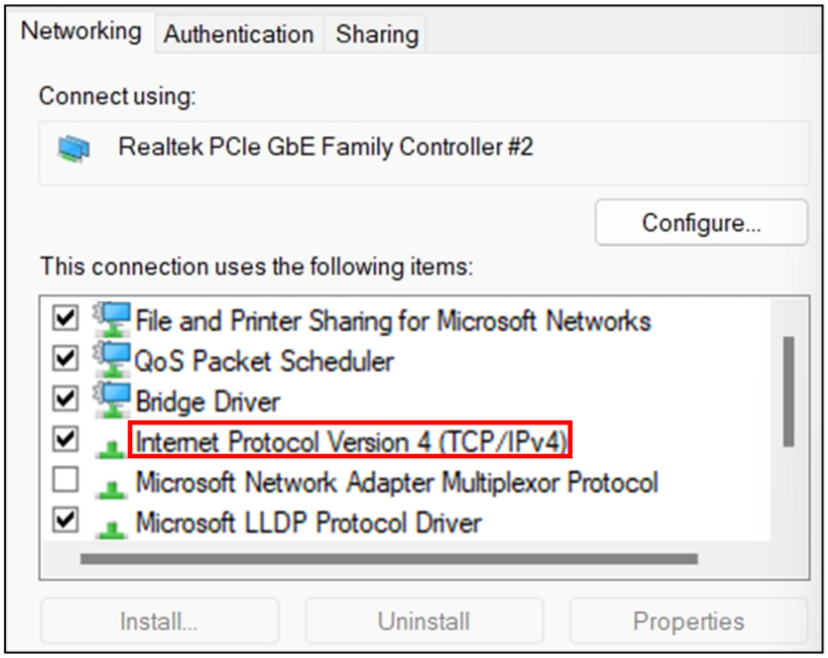

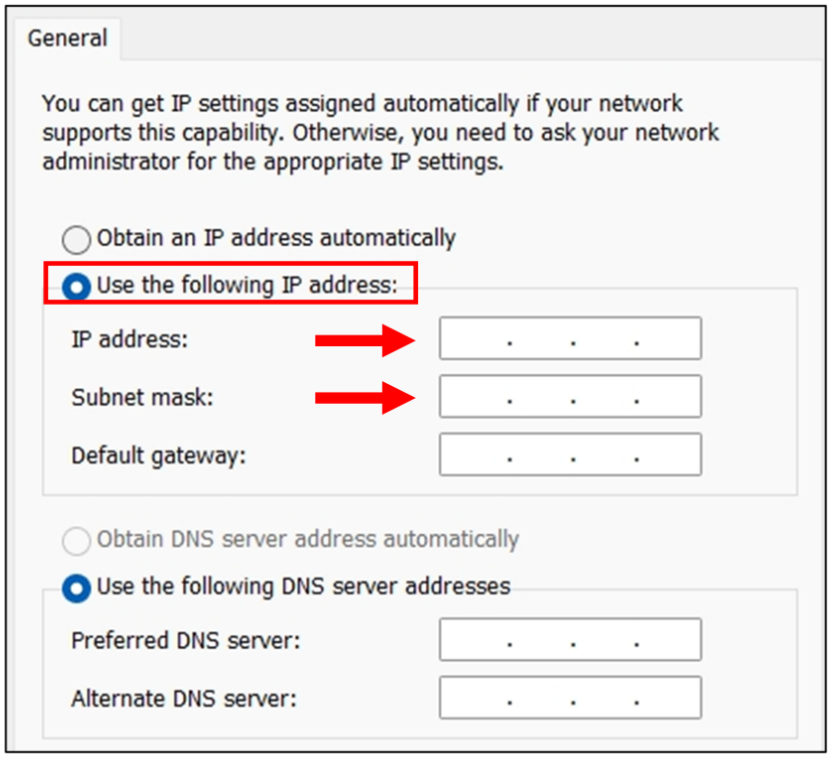

Ping command can be used to check the connection:

1. Press Win + R to open the Run dialog box.
2. Enter "cmd" and click [**OK**] to open the Command Prompt.
3. Enter "ping 192.168.1.201" and check the output.

5. To enable VLAN tagging:
   Click [**Configure**] > Under the [**Advanced**] tag, select [**VLAN ID**] from the [**Property**] list > Input a VLAN ID in the [**Value**] box > Click [**OK**].

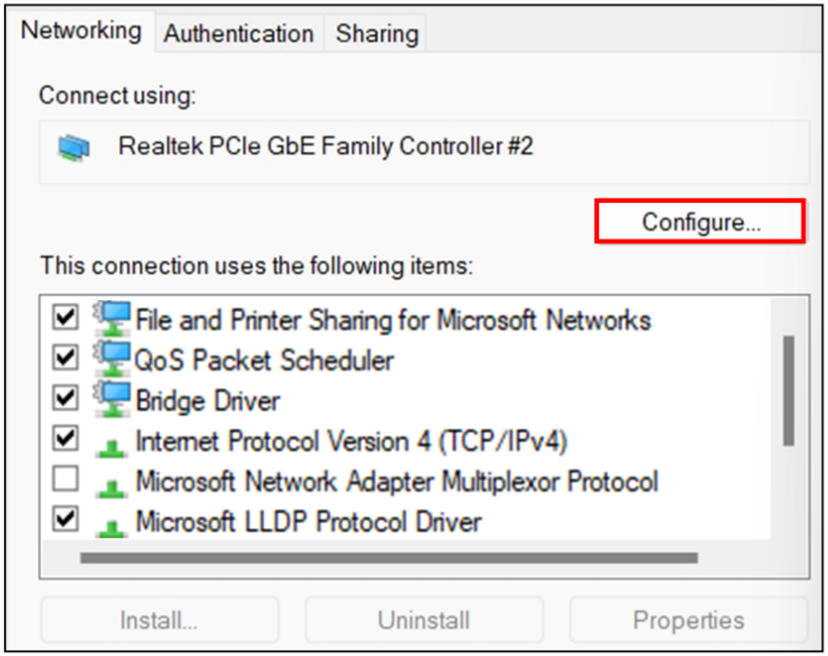

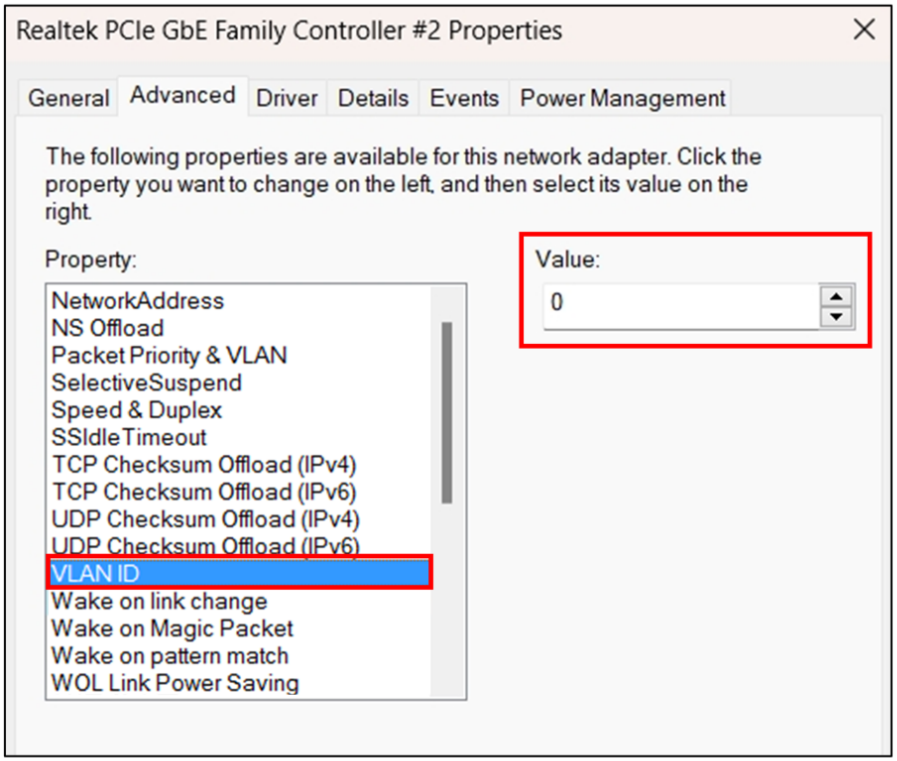

If the [**Property**] list has no [**VLAN ID**], it is recommended to update the network adapter driver.

2.5.2. In Ubuntu

1. Find the host computer's network interface name.

   Method 1

   a. Open **Settings — Network**.
   b. Look for the interface whose status is "Connected".
   The name in parentheses after "Ethernet" is the network interface name.

   Method 2

   a. Open a terminal and run this command:

```
ifconfig
```

   b. Look for the interface with non-zero RX packets and bytes.
   (In the example below, **enp5s0** shows non-zero Rx packets and bytes, indicating active data transmission.)

```
❯ ifconfig
docker0: flags=4099<UP,BROADCAST,MULTICAST>  mtu 1500
        inet [redacted] netmask [redacted] broadcast [redacted]
        ether [redacted] txqueuelen 0  (Ethernet)
        RX packets 0  bytes 0 (0.0 B)
        RX errors 0  dropped 0  overruns 0  frame 0
        TX packets 0  bytes 0 (0.0 B)
        TX errors 0  dropped 0 overruns 0  carrier 0  collisions 0

enp2s0f0: flags=4099<UP,BROADCAST,MULTICAST>  mtu 1500
        ether [redacted] txqueuelen 1000  (Ethernet)
        RX packets 0  bytes 0 (0.0 B)
        RX errors 0  dropped 0  overruns 0  frame 0
        TX packets 0  bytes 0 (0.0 B)
        TX errors 0  dropped 0 overruns 0  carrier 0  collisions 0

enp5s0: flags=4099<UP,BROADCAST,MULTICAST>  mtu 1500
        ether [redacted] txqueuelen 1000  (Ethernet)
        RX packets 267706980  bytes 300970909734 (300.9 GB)
        RX errors 0  dropped 0  overruns 0  frame 0
        TX packets 3184  bytes 590575 (590.5 KB)
        TX errors 0  dropped 0 overruns 0  carrier 0  collisions 0
```

When not using VLAN

2. Run this command in the terminal:

```
sudo ifconfig ${interface_name} ${ip_addr}
```

   - Replace `${interface_name}` with the host computer's network interface name.
   - Replace `${ip_addr}` with the host computer's IP address.

When using VLAN

2. Run this command in the terminal:

```
sudo ip link add link ${interface_name} name ${interface_name}.${vlan_id} type vlan id ${vlan_id}
sudo ip link set up ${interface_name}.${vlan_id}
sudo ip addr add ${ip_addr}/24 dev ${interface_name}.${vlan_id}
ip addr show ${interface_name}.${vlan_id}
```

- Replace `${interface_name}` with the host computer's network interface name.
- Replace `${vlan_id}` with the host computer's VLAN ID.
- Replace `${ip_addr}` with the host computer's IP address.

2.6. Tools

Tool	Purpose	Where to find it
PandarView 2	Point cloud visualization software: To record and display point cloud data.	Download it at: https://www.hesaitech.com/downloads/
Web Control	To set parameters, check device info and status, or upgrade firmware and software.	See Section 4 Web Control.
HTTP API	To set parameters, check device info and status, or upgrade firmware and software.	Contact Hesai technical support to receive the API Reference Manuals.
Pandar TCP Commands (PTC) API	To set parameters, check device info and status, or upgrade firmware and software. Network parameters: • Default Source IPv4 address: 192.168.1.201 • Default PTC port: 9347	Contact Hesai technical support to receive the API Reference Manuals.
Software development kits (SDKs) and ROS drivers	To assist development.	Visit Hesai's official GitHub page: https://github.com/HesaiTechnology

3. Data structure

Unless otherwise specified, all the multi-byte fields are unsigned values in little-endian format.

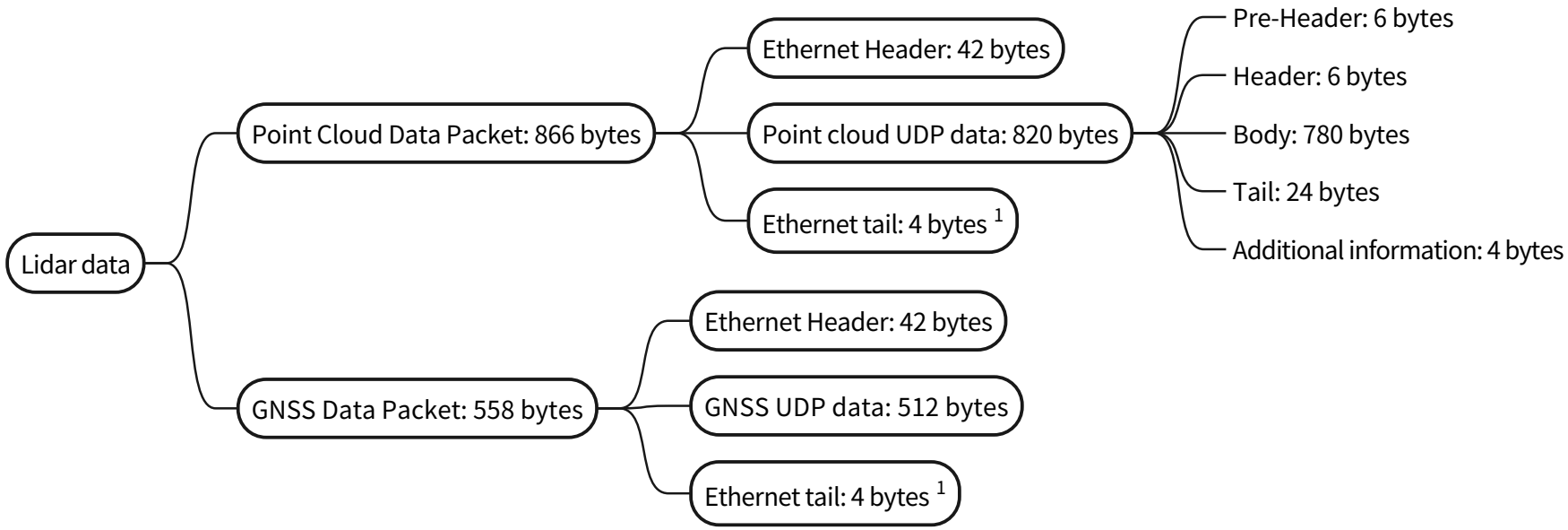

1. Network monitoring software (such as WireShark) usually does not display the **Ethernet tail** (4 bytes).

Figure 16. Data structure

3.1. Point Cloud Data Packet

Before receiving Point Cloud Data Packets, please perform Network settings on the host computer.

3.1.1. Ethernet Header

Point Cloud Data Packet: Ethernet Header

Field	Byte(s)	Description
Ethernet II MAC	12	Destination MAC: xx:xx:xx:xx:xx:xx (FF:FF:FF:FF:FF:FF for broadcast) Source MAC: xx:xx:xx:xx:xx:xx
Ethernet Data Packet Type	2	0x08, 0x00
Internet Protocol	20	Protocol parameters
UDP Port Number	4	Source port (default: 10000) Destination port (default: 2368)
UDP Length	2	Eight bytes more than point cloud UDP data (see Figure 16. Data structure).
UDP Checksum	2	Checksum of the Ethernet Header

3.1.2. Point cloud UDP data

Pre-Header

Field	Byte(s)	Description
Start of Packet	1	0xEE
Start of Packet	1	0xFF
Protocol Version Major	1	Main class of the point cloud UDP packet structure Current value: 0x06
Protocol Version Minor	1	Subclass of the point cloud UDP packet structure Current value: 0x01
Reserved	2	-

Header

Field	Byte(s)	Description
Channel Num	1	Number of laser channels Fixed: 0x20 (32)
Block Num	1	Number of block(s) per packet Fixed: 0x06 (6)
First Block Return	1	Reserved
Dis Unit	1	Fixed: 0x05 (5 mm)
Return Num	1	Maximum number of returns from each channel 0x03 (3)
UDP Sequence	1	[7:1] are reserved. Bit: [0] UDP sequence Value: 1 — YES (fixed); 0 — NO

Body

Return mode

In Dual or Triple Return mode, the measurements of each round of firing are stored in two or three adjacent blocks respectively.

- The `Azimuth` fields of these adjacent blocks are the same.
- The sequences of returns are shown in the table below.

Return Mode field	Return Mode	Blocks 1 to 6					
0x38	Single Return (Last)	Last	Last	Last	Last	Last	Last
0x37	Single Return (Strongest)	Strongest	Strongest	Strongest	Strongest	Strongest	Strongest
0x33	Single Return (First)	First	First	First	First	First	First
0x39	Dual Return (Last, Strongest)	Last	Strongest	Last	Strongest	Last	Strongest
0x3C	Dual Return (First, Strongest)	First	Strongest	First	Strongest	First	Strongest
0x3B	Dual Return (First, Last)	First	Last	First	Last	First	Last
0x3D	Triple Return (First, Last, Strongest)	First	Last	Strongest	First	Last	Strongest

Body

Field	Byte(s)	Description
Block 1	130	For Block 1: Measurements made by each channel (starting from Channel 1) Refer to Each block in the body.
Block 2	130	For Block 2: Measurements made by each channel (starting from Channel 1)
…	…	…
Block 6	130	For Block 6: Measurements made by each channel (starting from Channel 1)

Each block in the body

Field	Byte(s)	Description
Azimuth	2	Current reference azimuth of this block Unit: 0.01°

<table>
<tr><th>Field</th><th>Byte(s)</th><th>Description</th></tr>
<tr><td>Channel 1</td><td>4</td><td>Measurements of Channel 1
<table>
<tr><th>Field</th><th>Bytes</th><th>Description</th></tr>
<tr><td>Distance</td><td>2</td><td>Object distance = Distance × Dis Unit
Dis Unit is specified in Section 3.1.2.2 Header.</td></tr>
<tr><td>Reflectivity</td><td>1</td><td>Range: 0 to 255

Default: linear mapping (Reflectivity = Reflectivity Field × 1%)
Also refer to Appendix D Nonlinear reflectivity mapping.
The mapping between this field and target reflectivity can be selected using Web Control or PTC commands.</td></tr>
<tr><td>Reserved</td><td>1</td><td>-</td></tr>
</table></td></tr>
<tr><td>Channel 2</td><td>4</td><td>Measurements of Channel 2</td></tr>
<tr><td>…</td><td>…</td><td>…</td></tr>
<tr><td>Channel 32</td><td>4</td><td>Measurements of Channel 32</td></tr>
</table>

Tail

Field	Byte(s)	Description
Reserved	10	-
Return Mode	1	See Return mode.

<table>
<tr><th>Field</th><th>Byte(s)</th><th>Description</th></tr>
<tr><td>Motor Speed</td><td>2</td><td>Unit: RPM
Spin rate of the motor (RPM) = frame rate (Hz) × 60</td></tr>
<tr><td>Date & Time</td><td>6</td><td>Whole second part of the Coordinated Universal Time (UTC) of this data packet
<table>
<tr><th>Each byte</th><th>Range (decimal)</th></tr>
<tr><td>Year (current year minus 1900)</td><td>⩾70</td></tr>
<tr><td>Month</td><td>1 to 12</td></tr>
<tr><td>Day</td><td>1 to 31</td></tr>
<tr><td>Hour</td><td>0 to 23</td></tr>
<tr><td>Minute</td><td>0 to 59</td></tr>
<tr><td>Second</td><td>0 to 59</td></tr>
</table>
The absolute time of a Point Cloud Data Packet is defined in Appendix B Absolute time of point cloud data.</td></tr>
<tr><td>Timestamp</td><td>4</td><td>The microsecond part of the Coordinated Universal Time (UTC) of this data packet.
Unit: µs
Range: 0 to 999 999 µs</td></tr>
<tr><td>Factory Information</td><td>1</td><td>Fixed: 0x42</td></tr>
</table>

Additional information

Field	Byte(s)	Description
UDP Sequence	4	Sequence number of this data packet Range: 0 to 0xFF FF FF FF

3.1.3. Ethernet tail

Field	Byte(s)	Description
FCS	4	Frame check sequence

3.1.4. Point cloud data analysis method

Take **Channel 5** in **Block 2** as an example.

Analyze the vertical angle of a data point

The designed vertical angle of **Channel 5** is 14.3°, according to Appendix A Channel distribution data.

- The accurate vertical angles are recorded in the angle correction file of this lidar (see Section 1.4 Channel distribution).
- 0° is the horizontal direction. The upward direction is defined as positive (see Figure 4. Channel vertical distribution (unit: mm)).
- Channel number counts from 1, from top to bottom.

Analyze the horizontal angle of a data point

The Y-axis of the lidar coordinate system is 0°. The clockwise direction (as viewed from above) is defined as positive.

Horizontal angle = ① + ②

① Angular position at the start time (see Section B.3 Start time of each block) of the current block

② Firing time angular offset of the current firing channel

① = ③ + ④

③ Current reference azimuth of this block

Can be read from the `Azimuth` field of **Block 2**. See Section 3.1.2.3 Body.

④ Horizontal angle offset of the current firing channel
The offset of **Channel 5** is 0°, according to Appendix A Channel distribution data.

The accurate horizontal angle offsets are recorded in the angle correction file of this lidar (see Section 1.4 Channel distribution).

② = ⑤ × ⑥

⑤ Firing time offset of the current firing channel
See Section B.4 Laser firing time of each channel.

⑥ Spin rate of the motor

See the `Motor Speed` field in Section 3.1.2.4 Tail. The unit should be converted to °/s.

Analyze the distance of a data point

See the `Distance` field of **Block 2: Channel 5** in Section 3.1.2.3 Body.

Draw the data point in a spherical or rectangular coordinate system

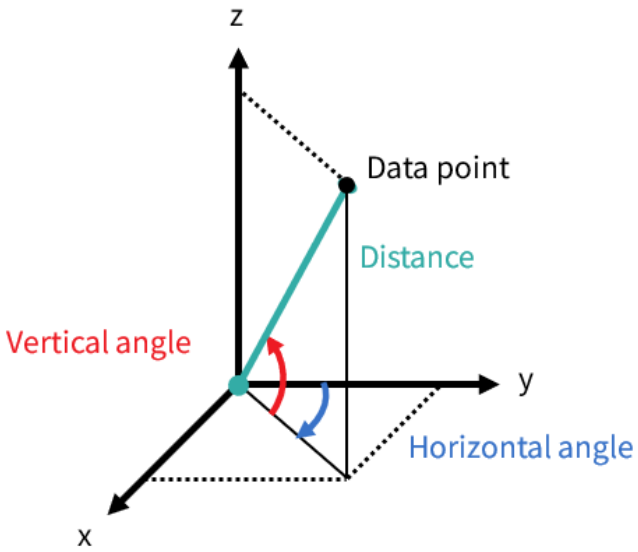

Obtain the real-time point cloud data by analyzing and drawing every data point in each frame

3.2. GNSS Data Packet

- Please configure network parameters on the host computer before receiving GNSS Data Packet. See Section 2.5 Network settings on the host computer.
- When GNSS is selected as the clock source, a GNSS Data Packet is triggered every second; When PTP is selected as the clock source, the lidar does not output GNSS Data Packet.

To select the clock source, refer to Section 4.2.3 Time sync.

All the multi-byte values are unsigned and in little-endian format.

3.2.1. Ethernet Header

GNSS Data packet: Ethernet Header

Field	Byte(s)	Description
Ethernet II MAC	12	Destination MAC: xx:xx:xx:xx:xx:xx (FF:FF:FF:FF:FF:FF for broadcast) Source MAC: xx:xx:xx:xx:xx:xx
Ethernet Data Packet Type	2	0x08, 0x00
Internet Protocol	20	Protocol parameters
UDP Port Number	4	Source port (default: 10000) Destination port (default: 10110)
UDP Length	2	8 bytes more than GNSS UDP data; see Figure 16. Data structure
UDP Checksum	2	Checksum of the Ethernet Header

3.2.2. GNSS UDP data

Field	Byte(s)	Description
GNSS Time Data	18	GNSS time, accurate to the second Field | Bytes | Description GNSS Header | 2 | 0xFFEE (0xFF first) Date | 6 | Year, month, and day in ASCII (2 bytes each, lower byte first) Time | 6 | Second, minute, and hour in ASCII (2 bytes each, lower byte first) Reserved | 4 | -
NMEA Data	100	NMEA sentence containing date and time ASCII code; valid till 2 bytes after the asterisk (*). Users can select the NMEA sentence to be received (see `GNSS Mode` in Section 4.2.3 Time sync).
Reserved	388	388 0xDF
GNSS Positioning Status	1	ASCII code, obtained from the NMEA sentence
PPS Lock Flag	1	1 — Locked 0 — Unlocked
Reserved	4	-

GPRMC data format

```
$GPRMC, <01>, <02>, <03>, <04>, <05>, <06>, <07>, <08>, <09>, <10>, <11>, <12>*hh
```

Field No.	Field	Description
<01>	UTC Time	Hour, minute, and second Typically in hhmmss (hour, minute, second) format
<02>	Location Status	A (hex = 41) — Active (valid position) V (hex = 56) — Void (invalid position) NUL (hex = 0) — GPS unlocked
…	…	…
<09>	UTC Date	Date information Typically in ddmmyy (day, month, year) format
…	…	…

The lidar's GPS data interface accepts a variety of GPRMC formats, as long as:

Field <01> (after the first comma separator) is the hour, minute, and second information.
Field <09> (after the ninth comma separator) is the date information.

For example, the following formats are both acceptable:

```
$GPRMC,072242,A,3027.3680,N,11423.6975,E,000.0,316.7,160617,004.1,W*67
$GPRMC,065829.00,A,3121.86377,N,12114.68322,E,0.027,,#160617#,,,A*74
```

GPGGA data format

```
$GPGGA, <01>, <02>, <03>, <04>, <05>, <06>, <07>, <08>, <09>, <10>, <11>, <12>*hh
```

Field No.	Field	Description
<01>	UTC Time	Hour, minute, and second Typically in hhmmss (hour, minute, second) format
…	…	…
<06>	GPS Fix Quality	Range: 0 to 9 Refer to the description given by the GPS device provider. Common definitions: 0 Invalid 4 RTK fix 1 GPS fix (SPS) 5 RTK float 2 DGPS fix 6 Estimated (dead reckoning) 3 PPS fix - -
…	…	…

The lidar's GPS data interface accepts a variety of GPGGA formats, as long as:

Field <01> (after the first comma separator) is the hour, minute, and second information.

For example, the following formats are both acceptable:

```
$GPGGA,123519,4807.038,N,01131.000,E,1,08,0.9,545.4,M,46.9,M,,*47
$GPGGA,134658.00,5106.9792,N,11402.3003,W,2,09,1.0,1048.47,M,-6.27,M,08,AAAA*60
```

3.2.3. Ethernet tail

Field	Byte(s)	Description
FCS	4	Frame check sequence

3.2.4. GNSS time data analysis method

```
> Data (512 bytes)
0000  04 d4 c4 eb 9b 37 ec 9f  0d 00 48 cb 08 00 45 00   ·····7·· ··H···E·
0010  02 1c c4 23 40 00 80 11  b0 66 c0 a8 01 c9 c0 a8   ···#@··· ·f******
0020  01 2d 27 10 27 7e 02 08  00 00 ff ee 30 32 34 30   ·-'·'~·· ····0240
0030  37 30 38 35 37 30 34 30  00 00 00 00 24 47 50 52   70857040 ····$GPR
0040  4d 43 00 2c 30 34 30 37  35 37 2e 37 36 2c 56 2c   MC·,0407 57.76,V,
0050  2c 2c 2c 2c 2c 2c 30 37  30 34 32 30 2c 2c 2c 4e   ,,,,,,07 0420,,,N
0060  2c 56 2a 30 36 36 36 36  36 36 36 36 36 36 36 36   ,V*06666 66666666
```

Figure 17. GNSS Data packet: GNSS time data (example)

Date

Field	Data (in ASCII)	Characters	Meaning
Year	0x30 0x32	'0', '2'	20
Month	0x34 0x30	'4', '0'	04
Day	0x37 0x30	'7', '0'	07

Time

Field	Data (in ASCII)	Characters	Meaning
Second	0x38 0x35	'8', '5'	58
Minute	0x37 0x30	'7', '0'	07
Hour	0x34 0x30	'4', '0'	04

4. Web Control

Web Control is used for setting parameters, viewing device info, and upgrading software/firmware.

To access Web Control, follow the steps below:

1. Connect the lidar to your PC using an Ethernet cable.
2. Complete Section 2.5 Network settings on the host computer.
3. Enter 192.168.1.201 in your web browser.

- Google Chrome and Mozilla Firefox are recommended.
- Firewall port exceptions: Port 9347 (PTC), Port 80 (HTTP), and Ports 319 and 320 (PTP 1588v2)

4.1. Home

Status	
Spin Rate	600 RPM
GPS	Unlock
NMEA (GPRMC/GPGGA)	Unlock
PTP	Free Run
Device Info	Device Log
Model	XT32M2X
P/N	XT32M2X-B01
S/N	XT32XXXXXXXXXXXXX
MAC Address	XX:XX:XX:XX:XX:XX
Software Version	2.1.20
Sensor Firmware Version	2.1.7
Controller Firmware Version	2.0.18

Buttons and parameters

Device Log Click to download a JSON file that contains the lidar status, device info, all configurable parameters, and the upgrade log.

Spin Rate Spin Rate of the motor (RPM) = frame rate (Hz) × 60

GPS GNSS pulse-per-second (PPS) status

- Lock: Lidar's internal clock is in sync with GNSS PPS.
- Unlock: Not in sync.

NMEA (GPRMC/GPGGA)	NMEA status • Lock: After receiving a valid NMEA message. • Unlock: Not receiving a valid NMEA message for over 2 seconds.
PTP	PTP status • Free Run: No PTP master is selected. • Tracking: Attempting to sync with the selected PTP master, but the absolute offset exceeds the user-specified limit in Section 4.2.3 Time sync. • Locked: The absolute offset is within the user-specified limit. • Frozen: The lidar has lost connection to the PTP master and is attempting to recover it. Meanwhile, lidar time will drift from the last synchronized time.

4.2. Settings

		Reset All Settings
Control IP		
IPv4 Address		192.168.1.201
IPv4 Mask		255.255.255.0
IPv4 Gateway		192.168.1.1
VLAN	☐	0
Settings		
Destination IP		255.255.255.255
Lidar Destination Port		2368
Spin Rate		600 RPM
Return Mode		First, Last, and Strongest
Sync Angle	☐	0
Trigger Method		Angle Based
Clock Source		GPS
NMEA Sentence		GPGGA
Require PPS Lock		OFF
GPS Destination Port		10110
Interstitial Points Filtering		OFF
Reflectivity Mapping		Linear Mapping
Standby Mode		In Operation/Standby

Save

Buttons

Reset All Settings	Reset all the configurable parameters to factory defaults, including: • Settings • Azimuth FOV
Save	Save and execute all the settings on this page. Exception: Standby Mode takes effect immediately without having to click **[Save]**.

4.2.1. Network

<table>
<tr><th>Parameter</th><th>Options</th><th>Description</th></tr>
<tr><td>VLAN</td><td>Default: OFF
VLAN ID: 1 to 4094</td><td>To enable VLAN tagging:
• make sure the host computer also supports VLAN;
• check the checkbox and input the lidar's VLAN ID (same as the host computer's VLAN ID).

If the lidar's VLAN ID differs from the host computer's, users will lose access to Web Control. To minimize such risks, the VLAN ID is zero (an invalid value) by default.
• When checking the checkbox, users will be alerted to input a valid VLAN ID.
• When unchecking the checkbox, the VLAN ID will default to zero.

• Once configured, the VLAN ID will not change during firmware upgrades.
• When VLAN is enabled, PTP connection will be lost; when VLAN is disabled, PTP connection will automatically recover.</td></tr>
<tr><td>Destination IP</td><td>Any except 0.0.0.0, 127.0.0.1, and the lidar's IPv4 address
Default: 255.255.255.255</td><td><table><tr><td>Communication mode</td><td>Destination IP</td></tr><tr><td>Broadcast (default)</td><td>255.255.255.255</td></tr><tr><td>Multicast</td><td>User-defined</td></tr><tr><td>Unicast</td><td>Same as the PC's IPv4 address</td></tr></table></td></tr>
<tr><td>Lidar Destination Port</td><td>Default: 2368</td><td>Destination port of point cloud data and Web Control (HTTP API)</td></tr>
</table>

4.2.2. Function

Parameter	Options	Description
Spin Rate	300 RPM 600 RPM (default) 1200 RPM	Spin rate of the motor The accurate spin rate is shown in Point Cloud Data Packets (see the `Motor Speed` field in Section 3.1.2.4 Tail). The set spin rate is also shown on the Home page (see Section 4.1 Home).
Return Mode	Single Return Dual Return Triple Return (default)	Also shown in Point Cloud Data Packets (see the `Return Mode` field in Section 3.1.2.4 Tail).
Sync Angle	0° to 359°	Phase lock angle • To activate this function, check the checkbox and input an azimuth. • At every full second, the lidar will rotate to that azimuthal position. Lidar azimuthal position is defined in Section 1.3 Basic structure. Definition of the full second (detailed in Section B.1 Source of absolute time): • When GNSS is locked, the full second is defined as the rising edge of the GNSS PPS signal. • When PTP is tracking or locked, the full second is retrieved from the PTP signal. (PPS signal is not required nor used.) • When neither GNSS nor PTP is locked, the full second is defined as the rising edge of the lidar's internal 1 Hz signal. To phase-lock multiple lidar units, connect them to the same clock source and set the same sync angle. These lidar units will rotate to the same azimuthal position at every full second.

Parameter	Options	Description
Trigger Method	Angle-Based (default) Time-Based	The way laser firings are triggered **Angle-based**: Lasers fire every 0.09° at 5 Hz, 0.18° at 10 Hz, or 0.36° at 20 Hz. **Time-based**: Lasers fire every 50 µs.
Interstitial Points Filtering	OFF (default) ON	To reduce the interstitial points in point cloud data. Definition of interstitial points: When a beam partially hits a front target's edge and further hits a rear target, the return signal can result in a false point located between both targets.
Reflectivity Mapping	Linear Mapping (default) Nonlinear Mapping	**Linear Mapping**: The `Reflectivity` field in Point Cloud Data Packets linearly represents target reflectivity (0 to 255%). **Nonlinear Mapping**: The mapping between the `Reflectivity` field and target reflectivity is nonlinear. This increases the contrast in low-reflectivity areas (see Appendix D Nonlinear reflectivity mapping).
Standby Mode	In Operation (default) Standby	In Standby mode, the motor stops running and lasers stop firing.

4.2.3. Time sync

With GNSS selected

Clock Source	**GPS**
NMEA Sentence	GPGGA
Require PPS Lock	OFF
GPS Destination Port	10110

With PTP selected

Clock Source	**PTP**
Profile	1588v2
Time Offset for Lidar Lock	1
PTP Network Transport	UDP/IP
PTP Domain Number	0
PTP logAnnounceInterval	1
PTP logSyncInterval	1
PTP logMinDelayReqInterval	0

Parameter	Options	Description
Clock Source	GPS (default) PTP	External source of absolute time

With GNSS selected

<table>
<tr><th>Parameter</th><th>Options</th><th>Description</th></tr>
<tr><td>NMEA Sentence</td><td>GPRMC
GPGGA (default)</td><td>Format of the NMEA data received from the external GNSS module (see Section 3.2.2 GNSS UDP data.)</td></tr>
<tr><td>Require PPS Lock</td><td>ON
OFF (default)</td><td>When this setting is ON, PPS must be locked (in addition to NMEA being locked) when updating the lidar's Date & Time.

The status of both NMEA and PPS signals are shown in Section 4.1 Home.

The complete logic is shown in this table.
<table>
<tr><th></th><th>PPS locked</th><th>PPS unlocked</th></tr>
<tr><td>NMEA locked</td><td>• Update Date & Time using the current NMEA sentence.
• Update the µs Timestamp using the current PPS signal.</td><td>• When "Require PPS Lock" is OFF, update Date & Time using the current NMEA sentence.
• When "Require PPS Lock" is ON, Date & Time is not updated.</td></tr>
<tr><td>NMEA unlocked</td><td>Update the µs Timestamp using the current PPS signal.</td><td>Date & Time is not updated.</td></tr>
</table>
• Date & Time: the lidar's system time, accurate to the second.
• µs Timestamp: the µs part of the lidar's system time.</td></tr>
<tr><td>Destination Port</td><td>Default: 10110</td><td>Port used for sending GNSS Data packets</td></tr>
</table>

With PTP selected

The lidar does NOT output GNSS Data Packets.

Parameter	Options	Description
Profile	1588v2 (default) 802.1AS 802.1AS Automotive	IEEE timing and synchronization standard
Time Offset for Lidar Lock	1 to 100 µs (integer) Default: 1	Upper limit of the absolute offset between Slave and Master when the lidar is in PTP Locked status; see Section 4.1 Home.
PTP Network Transport	UDP/IP (default) L2	Network transport protocol UDP/IP: Available only for the 1588v2 profile L2: Available for all profiles
Domain Number	0 to 127 (integer) Default: 0	Domain attribute of the local clock

When using the 1588v2 profile, these additional parameters can be configured:

Parameter	Options	Description
PTP logAnnounceInterval	-2 to 3	Time interval between Announce messages Default: 1 (2 seconds)
PTP logSyncInterval	-7 to 3	Time interval between Sync messages Default: 1 (2 seconds)
PTP logMinDelayReqInterval	-7 to 3	Minimum permitted mean time between Delay_Req messages Default: 0 (1 second)

When using the 802.1AS or 802.1AS Automotive profile:

Parameter	Options	Description
Switch Type	TSN (default) Non-TSN	Type of the network switch TSN: Time Sensitive Network, using Peer-to-Peer delay mechanism Non-TSN: Using End-to-End delay mechanism

4.3. Azimuth FOV

Azimuth FOV Setting	For all channels ▼
Save	

Buttons

Save Save and execute all the settings on this page.

Parameter	Options	Description
Azimuth FOV Setting	For all channels (default) Multi-section FOV	Configuration mode of the azimuth FOV The lidar outputs valid data only within the specified azimuth FOV ranges.

- The angles in degrees are accurate to the first decimal place.
- If the Start Angle is larger than the End Angle, then the actual range is the union of [Start Angle, 360°) and [0°, End Angle).
  For instance, when the angle range is set to be [270°, 90°), the actual azimuth FOV is [270°, 360°) ∪ [0°, 90°).

4.3.1. For all channels

Input a start angle and an end angle to form a continuous angle range [Start, End].
This range applies to all channels.

Azimuth FOV Setting		For all channels
Azimuth FOV for All Channels	Start:	0.0
	End:	360.0
	Save	

4.3.2. Multi-section FOV

Input multiple (⩽5) sets of Start Angles and End Angles to form multiple continuous angle ranges.
These ranges apply to all channels.

Azimuth FOV Setting: Multi-section FOV

Multi-section FOV	Start Angle	End Angle
Azimuth FOV 1	0.0	0.0
Azimuth FOV 2	0.0	0.0
Azimuth FOV 3	0.0	0.0
Azimuth FOV 4	0.0	0.0
Azimuth FOV 5	0.0	0.0

Save

4.4. Operation statistics

Start-Up Counts	510
Internal Temperature	32.10°C
Internal Humidity	50.0% RH
System Uptime	0 h 5 min
Total Operation Time	559 h 43 min
Internal Temperature	Operation Time
< -40°C	0 h 1 min
-40 to -20°C	0 h 46 min
-20 to 0°C	0 h 49 min
0 to 20°C	8 h 40 min
20 to 40°C	38 h 20 min
40 to 60°C	393 h 17 min
60 to 80°C	109 h 50 min
80 to 100°C	6 h 16 min
100 to 120°C	1 h 44 min
> 120°C	0 h 0 min

4.5. Upgrade

- Before upgrading, please contact Hesai technical support to obtain the .patch file.
- It is recommended to place a protective cover or other opaque material over the lidar's cover lens when upgrading.
- The instructions for downgrading are the same as those for upgrading.

Upgrade steps

1. Click the **[Upload]** button and select a .patch file to start the upgrade.
2. Wait for the process to be 100% complete. The lidar will automatically reboot.
3. The latest version numbers will display in "Upgrade" and "Home" pages.

If the upgrade fails, hard restart the lidar and try again.

Buttons

Upload	To upload the .patch file
Restart	Software reboot Afterward, the Start-Up Counts in the Operation Statistics page increments by 1; see Section 4.4 Operation statistics.

Parameter	Current version
Software version	2.1.20
Firmware of sensor version	2.1.7
Firmware of controller version	2.0.18
Upgrade log	-

The above version numbers may be different. The actual web page shall prevail.

5. Maintenance

The lidar's cover lens is made of plastic (polycarbonate, PC).

- Do NOT wipe the cover lens when it is dry, nor use abrasive cleaners. Doing so can damage the optical coating.
- Do NOT use organic cleaners, which can damage the cover lens and even cause cracking.
  - Organic cleaners include but are not limited to tar removers, self-cleaning agents, adhesive removers, coating removers, foam cleaners, iron powder removers for car paint, glass cleaners, thinning agents, de-icers, paint surface treatment agents, alcohol, and vinegar.
  - If organic cleaners may be present when cleaning the equipment or performing related operations, please protect the cover lens to prevent any contact with organic cleaners.
- Do NOT apply excessive force to the lidar, as this can damage the cover lens.
  - Using automatic cleaning devices that are not specifically designed for lidars may pose risks. Please contact Hesai technical support for assessment.
  - Do NOT use sharp objects (such as knives or metal tweezers) or hard brushes (such as stiff nylon brushes or wire brushes) to scratch the cover lens cover surface. Such actions may damage the cover lens surface, and in severe cases, may cause malfunction.
- After prolonged exposure to strong sunlight and high temperatures, the cover lens should NOT be cleaned immediately.
- If snow or ice accumulates on the cover lens, do NOT use a pressure washer or ice scraper.
  - A small broom is recommended to remove snow.
  - A solvent-free (i.e., free of organic solvents) ice removal spray is recommended to remove ice; alternatively, wait for the ice to melt by itself.
- Do NOT wax the cover lens.

Please regularly check on the cover lens, considering your use frequency, storage environment, and climate conditions.

- If foreign objects (such as dust, fingerprints, or oil stains) are found on the cover lens, make sure to clean them.
- If corrosive foreign objects (such as insect remains, bird droppings, tree resin, road dust, industrial dust, asphalt, soot particles, and road salt) are found on the cover lens, make sure to clean them immediately.

Cleaning procedure

1. Make sure the lidar is powered OFF.
2. Choose an appropriate cleaning agent:
   - For light stains, use room temperature water.
   - For heavier stains, use a mild soap solution (no more than two tablespoons of soap per quart or liter of water).
   - For stubborn stains, use a solvent-free (i.e., free of organic solvents), pH-neutral detergent at room temperature, such as car shampoo.
3. Take a clean soft sponge or anti-static microfiber cloth, dampen it with the chosen cleaning agent, and gently wipe the dirty area on the cover lens back and forth.
4. For stubborn stains, cover the dirty area with the dampened sponge or cloth to soften the stains before wiping.
5. Immediately after removing the stains, rinse the cover lens with clean water. Then, use a clean soft sponge or microfiber cloth to gently wipe away any remaining liquid (which may contain residual cleaning agents or contaminants).

6. Troubleshooting

If the following procedures cannot solve your problem, please contact Hesai technical support.

Symptoms	Points to check
Indicator light is off on the connection box.	Make sure that the following conditions are met: • The power adapter is properly connected and in good condition. • The connection box is intact. • The input voltage and input current satisfy the requirements in Section 2.4 Connection box (optional). Afterward, power on the lidar again and check if the symptom persists.
Motor is not running.	Make sure that the following conditions are met: • The power adapter is properly connected and in good condition. • The input voltage and input current satisfy the requirements in Section 1.5 Specifications. • The lidar can be accessed using Web Control (see Cannot open Web Control). • The lidar is not in standby mode; this can be confirmed using Web Control or PTC commands. • If a connection box is used, the connection box is intact. Afterward, power on the lidar again and check if the symptom persists.
Motor is running, but no output data is received, neither by Wireshark nor by PandarView 2.	Make sure that the following conditions are met: • The Ethernet cable is properly connected (by unplugging and plugging again). • Destination IP is correctly set; this can be confirmed using Web Control or PTC commands. • Firmware version is correct; this can be confirmed using Web Control or PTC commands. • Azimuth FOV is correctly set; this can be confirmed using Web Control or PTC commands. • The lidar is emitting laser light; this can be confirmed using an infrared camera, an infrared sensor card, or a phone camera without an infrared filter. Afterward, power on the lidar again and check if the symptom persists.

Symptoms	Points to check
Output data can be received by Wireshark but not by PandarView 2.	Make sure that the following conditions are met: • Lidar Destination Port is correctly set; this can be confirmed using Web Control or PTC commands. • If VLAN is enabled, the computer's VLAN ID should be the same as the lidar's; this can be checked using Web Control or PTC commands. • The computer's firewall for public networks is turned off, or PandarView 2 is added to firewall exceptions. • The latest PandarView 2 is installed (see Downloads page of Hesai's official website or contact Hesai technical support). Afterward, power on the lidar again and check if the symptom persists.
Cannot open Web Control.	Make sure that the following conditions are met: • Ethernet cable is properly connected (by unplugging and plugging again). • The lidar's IP is in the same subnet with the computer's (WireShark may be used to check the lidar's IP that broadcasts data packets). • If VLAN is enabled, the computer's VLAN ID should be the same as the lidar's; this can be checked using Web Control or PTC commands. Afterward, follow these steps: 1. Restart the computer or connect the lidar to another computer. 2. Power on the lidar again and check if the symptom persists.

Symptoms	Points to check
Point cloud is abnormal, showing obviously misaligned points, flashing points, or incomplete FOV.	Make sure that the following conditions are met: • The lidar's cover lens is clean. If not, refer to Section 5 Maintenance for the cleaning method. • The lidar's angle correction file is applied (refer to PandarView 2 User Manual). • Azimuth FOV is properly set; this can be confirmed using Web Control or PTC commands. • Spin Rate is steady; this can be confirmed either by checking the `Motor Speed` field (if available) in Point Cloud Data Packets, or by using Web Control, PandarView 2 or PTC commands. • The lidar's internal temperature is between -20°C and 90°C; this can be confirmed using Web Control, PandarView 2 or PTC commands. Afterward, check for packet loss. If no packet is lost yet the point cloud flashes, try these steps: 1. Update PandarView 2 to the latest version (see Downloads page of Hesai's official website or contact Hesai technical support). 2. Restart the computer. If the point cloud is still abnormal, try these steps: 1. Connect the lidar to another computer and another network. 2. Power on again and check if the symptom persists.

Symptoms	Points to check
The number of data packets received is abnormal, indicating missing packets.	Make sure that the following conditions are met: • Azimuth FOV is properly set; this can be confirmed using Web Control or PTC commands. • Spin Rate is steady; this can be confirmed either by checking the `Motor Speed` field (if available) in Point Cloud Data Packets, or by using Web Control, PandarView 2 or PTC commands. • The lidar's internal temperature is between -20°C and 90°C; this can be confirmed using Web Control, PandarView 2 or PTC commands. • Ethernet is not overloaded. • No switch is connected to the network (the data transmitted from other devices may cause network congestion and packet loss). Afterward, follow these steps: 1. Connect the computer to no other devices but the lidar and check for packet loss. 2. Power on the lidar again and check if the symptom persists.
GNSS cannot be locked.	Make sure that the following conditions are met: • GNSS receiver is properly connected. • PPS signal is connected to the lidar. • GNSS Destination Port is correctly set; this can be confirmed using Web Control or PTC commands. • The GNSS signals satisfy the electrical requirements in Section 2.3 Electrical interface and Section 2.4 Connection box (optional). Afterward, power on the lidar again and check if the symptom persists.

Appendix A: Channel distribution data

- Channel number counts from 1, from top to bottom.
- The vertical angles (elevation) in the table are design values.
- The accurate values are in this lidar's angle correction file (see [Angle correction file] and Section 3.1.4 Point cloud data analysis method).

Channel number	Horizontal angle (azimuth) offset	Vertical angle (elevation)
1	0°	19.5°
2	0°	18.2°
3	0°	16.9°
4	0°	15.6°
5	0°	14.3°
6	0°	13.0°
7	0°	11.7°
8	0°	10.4°
9	0°	9.1°
10	0°	7.8°
11	0°	6.5°
12	0°	5.2°
13	0°	3.9°
14	0°	2.6°
15	0°	1.3°
16	0°	0.0°

Channel number	Horizontal angle (azimuth) offset	Vertical angle (elevation)
17	0°	-1.3°
18	0°	-2.6°
19	0°	-3.9°
20	0°	-5.2°
21	0°	-6.5°
22	0°	-7.8°
23	0°	-9.1°
24	0°	-10.4°
25	0°	-11.7°
26	0°	-13.0°
27	0°	-14.3°
28	0°	-15.6°
29	0°	-16.9°
30	0°	-18.2°
31	0°	-19.5°
32	0°	-20.8°

Appendix B: Absolute time of point cloud data

B.1. Source of absolute time

The lidar retrieves the current absolute time by connecting to an external clock source.

B.1.1. GNSS as the clock source

The lidar connects to a third-party GNSS module to obtain pulse-per-second (PPS) signals and NMEA sentences.

- Each rising edge of the lidar's internal 1 Hz signal triggers a GNSS Data Packet. The data format is detailed in Section 3.2 GNSS Data Packet.
- The timing requirements of PPS and NMEA are shown in Section 2.3.1 Pin description.

The absolute time is updated as follows:

NMEA status	Date and time (accurate to the second)	Lidar behavior
Unlocked (Initial)	Virtual	Because the lidar has not been locked before, it starts counting from **a virtual UTC** (such as 2000–01–01 00:00:00) using the lidar's internal 1 Hz signal.

NMEA status	Date and time (accurate to the second)	Lidar behavior
Locked	Synchronized	At each rising edge of the internal 1 Hz signal, the lidar obtains the actual date and time by performing these two steps: 1. Extract the date and time from the previous NMEA message. 2. Add 1 full second. • When `Require PPS Lock` is ON: Only when both NMEA and PPS are locked, NMEA messages are used to update the date and time; when PPS is not locked, NMEA messages are considered untrustworthy and thus not used. • `Require PPS Lock` can be set using Web Control (see Require PPS Lock) or HTTP/PTC API (see the *API Reference Manuals*).
Unlocked (Lost)	Drifting	When the lidar goes from Locked to Unlocked, it starts counting from **the last synchronized time** using the lidar's internal 1 Hz signal. This absolute time will gradually drift from the actual GNSS time.

PPS status	µs time	Lidar behavior
Unlocked (Initial)	Not synchronized	The lidar's internal 1 Hz signal is not aligned with the GNSS second.
Locked	Synchronized	The rising edge of the lidar's internal 1 Hz signal is aligned with the rising edge of the PPS signal (i.e. the start of each GNSS second).
Unlocked (Lost)	Drifting	The lidar counts the absolute time using the internal 1 Hz signal. This absolute time will gradually drift from the actual GNSS second.

B.1.2. PTP as the clock source

The lidar connects to a third-party PTP master to obtain PTP signal.

- PPS signal is not required nor used.
- PTP can be configured using Web Control or PTC commands.
- The status of PTP signal can be found using Web Control or PTC commands.
- The lidar does not output GNSS Data Packets.

The absolute time is updated as follows:

PTP status	Date and time (accurate to the microsecond)	Lidar behavior
Free run	Virtual	Because the lidar has not been locked before, it starts counting from **a virtual UTC** (such as 2000–01–01 00:00:00) using the lidar's internal 1 Hz signal.
Tracking or Locked	Synchronized	The lidar extracts the actual date and time from the PTP master's messages.
Frozen	Drifting	When the lidar goes from Tracking/Locked to Frozen, it starts counting from **the last synchronized time** using the lidar's internal 1 Hz signal. This absolute time will gradually drift from the actual PTP time.

- PTP is a Plug & Play protocol; the lidar works as a PTP slave device and requires no additional setup.
- The `Timestamp` and `Date & Time` fields in Point Cloud Data Packets strictly follow the PTP master device. Certain PTP master devices may have a specified offset from the lidar's time output. Please verify the configuration and calibration of your PTP master device.

B.2. Absolute time of the Point Cloud Data Packets

The absolute time of a Point Cloud Data Packet is $t_0 = t_s + t_{ms}$, where:

- t_s is the whole second part (see the `Date & Time` field).
- t_{ms} is the microsecond part (see the `Timestamp` field).

The definition of the above fields is in Section 3.1.2.4 Tail.

B.3. Start time of each block

Given the absolute time of this Point Cloud Data Packet as t_0, the start time of each block t(m) can be calculated.

At each t(m), the lidar saves the current azimuth into the current block's Azimuth field in the Point Cloud Data Packet; see Section 3.1.2.3 Body.

(Unit: µs)

Single Return mode

Block	Start time t(m)
Block 6	t_0
Block N	$t_0 - 50 \times (6 - N)$
Block 1	$t_0 - 50 \times 5$

Dual return mode

Block	Start time t(m)
Blocks 6 & 5	t_0
Blocks 4 & 3	$t_0 - 50 \times 1$
Blocks 2 & 1	$t_0 - 50 \times 2$

Triple return mode

Block	Start time t(m)
Blocks 6, 5, & 4	t_0
Blocks 3, 2, & 1	$t_0 - 50 \times 1$

B.4. Laser firing time of each channel

In Block m, the absolute firing time of Channel n is:

$$t(m, n) = t(m) + \Delta t(n)$$

The firing time offsets Δt(n) are below.
Unit: µs

Channels 1 to 16	$\Delta t(n) = 5.632 + 2.888 \times (n - 1) + 0.368$
Channels 17 to 32	$\Delta t(n) = 5.632 + 2.888 \times (n - 17) + 0.368$

Appendix C: Power supply requirements

C.1. Input voltage

To ensure that the input voltage U_{in} at the lidar's connector (see Section 2.3 Electrical interface) is between 9 to 32 V DC, check these specifications:

- U_s: Voltage of the power source
- U_{drop}: Voltage drop over the cable, from the power source to the lidar's connector

$$U_{\text{in}} = U_{\text{s}} - U_{\text{drop}}$$

C.1.1. Estimate the cable voltage drop

Use either the estimation formula or the lookup table.

Estimation formula

When the lidar operates at 10 Hz under room temperature (23 ± 5°C), cable voltage drop can be estimated as:

$$U_{\text{drop}} = \frac{U_s - \sqrt{U_s^2 - 40r}}{2}$$

L	Cable length (unit: m)
r	Cable resistance (unit: Ω)
U_s	Source voltage (unit: V)

The wire gauge of the lidar's power wire should be ⩽26 AWG.
For 26 AWG wires, r = 0.3L.

Lookup table

Cable length L	Cable voltage drop		
	When U_s = 12 V	When U_s = 24 V	When U_s = 36 V
1.5 m	0.39 V	0.19 V	0.13 V
2 m	0.52 V	0.25 V	0.17 V
5 m	1.42 V	0.64 V	0.42 V
10 m	3.55 V (lidar's input voltage < 9 V)	1.32 V	0.85 V

As shown in the table above, when the cable length exceeds 10 m, the source voltage should be greater than 24 V.

C.1.2. Avoid overvoltage

When the lidar's input voltage approaches 36 V, make sure there is no additional overshoot in the external power system. Even a short period of overvoltage can cause irreversible damage to the lidar.

C.2. Input power

The lidar's peak power consumption is below 30 W in all operating conditions.
After a power-on in an ambient temperature below 0°C, power consumption typically remains around 15 W for a period of time.
When setting the frame rate to 20 Hz, power consumption will also be higher than the typical value in Section 1.5 Specifications.
In the above or similar conditions, we recommend providing at least 30 W of input power to the lidar.

C.3. Power up/down

During power-up

The voltage requirements are shown below.

- The lidar's input voltage should remain below 1 V for more than 50 ms before ramping up.
- During the ramp-up, the input voltage should climb to 90% of its designed value in less than 500 ms.

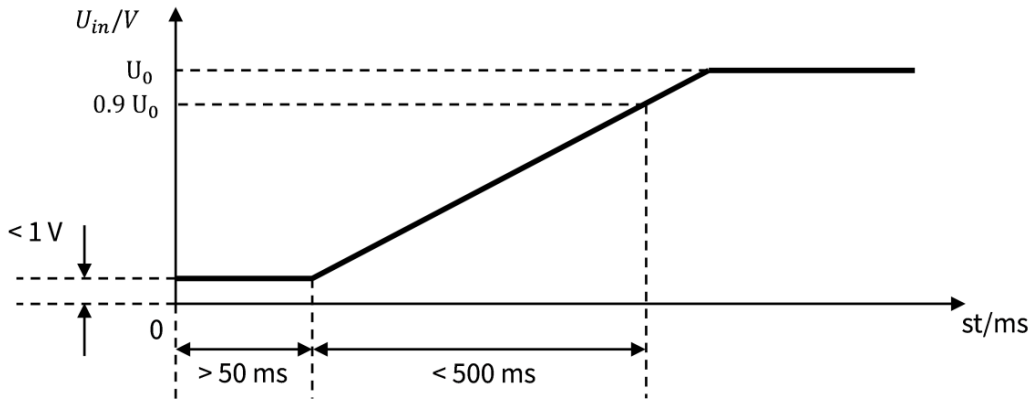

Figure 18. Voltage requirements during power-up

During power-down

Once the lidar's input voltage falls below 1 V, it must remain below 1 V for at least 50 ms before the next power-up.

Appendix D: Nonlinear reflectivity mapping

By default, the `Reflectivity` field in Point Cloud Data Packets (see Section 3.1.2.3 Body) linearly represents target reflectivity.

Alternatively, users may choose the Nonlinear Mapping mode using Web Control or PTC commands.

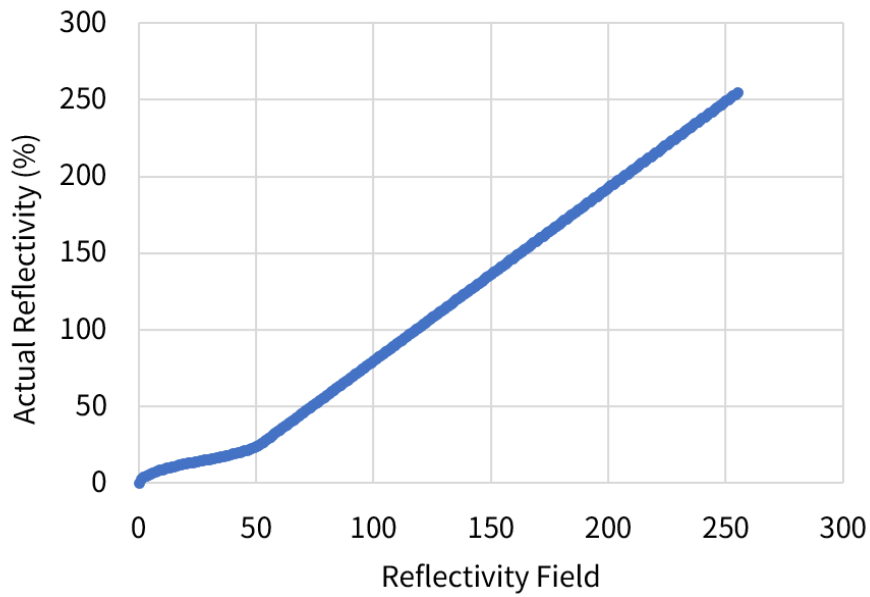

Figure 19. Nonlinear mapping

Nonlinear mapping

Reflectivity field	Actual reflectivity %	Reflectivity field	Actual reflectivity %	Reflectivity field	Actual reflectivity %	Reflectivity field	Actual reflectivity %
0	0	1	2.89	2	4.08	3	5
4	5.77	5	6.45	6	7.07	7	7.64
8	8.16	9	8.66	10	9.13	11	9.57
12	10	13	10.41	14	10.8	15	11.18
16	11.55	17	11.9	18	12.25	19	12.58
20	12.91	21	13.23	22	13.54	23	13.84
24	14.14	25	14.43	26	14.72	27	15
28	15.28	29	15.57	30	15.86	31	16.16
32	16.46	33	16.77	34	17.09	35	17.42
36	17.75	37	18.1	38	18.45	39	18.82
40	19.2	41	19.59	42	20	43	20.43
44	20.87	45	21.34	46	21.84	47	22.36
48	22.93	49	23.55	50	24.23	51	25
52	25.92	53	27.09	54	28.22	55	29.35
56	30.47	57	31.6	58	32.73	59	33.86
60	34.99	61	36.12	62	37.25	63	38.37
64	39.5	65	40.63	66	41.76	67	42.89
68	44.02	69	45.15	70	46.28	71	47.4
72	48.53	73	49.66	74	50.79	75	51.92

Reflectivity field	Actual reflectivity %	Reflectivity field	Actual reflectivity %	Reflectivity field	Actual reflectivity %	Reflectivity field	Actual reflectivity %
76	53.05	77	54.18	78	55.3	79	56.43
80	57.56	81	58.69	82	59.82	83	60.95
84	62.08	85	63.21	86	64.33	87	65.46
88	66.59	89	67.72	90	68.85	91	69.98
92	71.11	93	72.23	94	73.36	95	74.49
96	75.62	97	76.75	98	77.88	99	79.01
100	80.14	101	81.26	102	82.39	103	83.52
104	84.65	105	85.78	106	86.91	107	88.04
108	89.16	109	90.29	110	91.42	111	92.55
112	93.68	113	94.81	114	95.94	115	97.07
116	98.19	117	99.32	118	100.45	119	101.58
120	102.71	121	103.84	122	104.97	123	106.09
124	107.22	125	108.35	126	109.48	127	110.61
128	111.74	129	112.87	130	114	131	115.12
132	116.25	133	117.38	134	118.51	135	119.64
136	120.77	137	121.9	138	123.02	139	124.15
140	125.28	141	126.41	142	127.54	143	128.67
144	129.8	145	130.93	146	132.05	147	133.18
148	134.31	149	135.44	150	136.57	151	137.7
152	138.83	153	139.95	154	141.08	155	142.21

Reflectivity field	Actual reflectivity %	Reflectivity field	Actual reflectivity %	Reflectivity field	Actual reflectivity %	Reflectivity field	Actual reflectivity %
156	143.34	157	144.47	158	145.6	159	146.73
160	147.86	161	148.98	162	150.11	163	151.24
164	152.37	165	153.5	166	154.63	167	155.76
168	156.88	169	158.01	170	159.14	171	160.27
172	161.4	173	162.53	174	163.66	175	164.79
176	165.91	177	167.04	178	168.17	179	169.3
180	170.43	181	171.56	182	172.69	183	173.81
184	174.94	185	176.07	186	177.2	187	178.33
188	179.46	189	180.59	190	181.72	191	182.84
192	183.97	193	185.1	194	186.23	195	187.36
196	188.49	197	189.62	198	190.74	199	191.87
200	193	201	194.13	202	195.26	203	196.39
204	197.52	205	198.65	206	199.77	207	200.9
208	202.03	209	203.16	210	204.29	211	205.42
212	206.55	213	207.67	214	208.8	215	209.93
216	211.06	217	212.19	218	213.32	219	214.45
220	215.58	221	216.7	222	217.83	223	218.96
224	220.09	225	221.22	226	222.35	227	223.48
228	224.6	229	225.73	230	226.86	231	227.99
232	229.12	233	230.25	234	231.38	235	232.51

Reflectivity field	Actual reflectivity %	Reflectivity field	Actual reflectivity %	Reflectivity field	Actual reflectivity %	Reflectivity field	Actual reflectivity %
236	233.63	237	234.76	238	235.89	239	237.02
240	238.15	241	239.28	242	240.41	243	241.53
244	242.66	245	243.79	246	244.92	247	246.05
248	247.18	249	248.31	250	249.44	251	250.56
252	251.69	253	252.82	254	253.95	255	255.08

Appendix E: Legal notice

Copyright © 2017-2025 Hesai Technology Co., Ltd.
All rights reserved. Use or reproduction of this manual in parts or its entirety in any form or by any means without the written authorization of Hesai is prohibited.

Hesai Technology makes no representations or warranties, either expressed or implied, with respect to the contents hereof and specifically disclaims any warranties, merchantability, or fitness for any particular purpose. Further, Hesai Technology reserves the right to revise this publication and to make changes from time to time in the contents hereof without obligation to notify any person of such revisions or changes.

HESAI and HESAI logo are registered trademarks of Hesai Technology. All other trademarks, service marks, and company names in this manual or on Hesai's official website are properties of their respective owners.

The software included in this product contains the copyright that is registered under Hesai Technology. Any third party is not permitted, except as expressly permitted by the licensor or expressly required by applicable law, to decompile, reverse engineer, disassemble, modify, rent, lease, loan, distribute, sublicense, create derivative works based on the whole or any part of the software.

Hesai Product Warranty Service Manual is on the Warranty Policy page of Hesai's official website: https://www.hesaitech.com/warranty-policy/

Hesai Technology Co., Ltd.

Phone: +86 400 805 1233
Website: www.hesaitech.com
Address: Building A, Haisu Culture Plaza, Shanghai, China

Business Email: info@hesaitech.comService
Email: service@hesaitech.com