HESAI

www.hesaitech.com

JT128

128-Channel Mechanical Lidar User Manual

Classification: C0 (Public)

Doc version: J01-en-261010

Table of Contents

■ **About this manual** 1
Access to this manual 1
Technical support 1
Legends and format 1
■ **Safety notice** 2
Special warnings 2
Operating environment 3
Personnel 5
Installation and operation 5
Repair 9
1 Introduction 10
1.1 Applicability 10
1.2 Operating principle 10
1.3 Basic structure 11
1.4 Channel distribution and coordinate systems 13
1.5 Specifications 16
2 Setup 20
2.1 Mechanical installation 20
2.1.1 Exterior dimensions 20
2.1.2 Recommended installation 22
2.1.3 Notes on screw installation 23
2.2 Electrical interface 24
2.2.1 Pin description 24
2.2.2 Connector use 26
2.3 Cable 28

2.3.1 Ports 29
2.4 Network settings on the host computer 30
2.4.1 In Windows 30
2.4.2 In Ubuntu 34
2.5 Tools 37
3 Data structure 38
3.1 Point Cloud Data Packet 39
3.1.1 Ethernet Header 39
3.1.2 Point cloud UDP data 40
3.1.3 Ethernet tail 48
3.1.4 Point cloud data analysis method 49
3.2 GNSS Data Packet 52
3.2.1 Ethernet Header 52
3.2.2 GNSS UDP data 53
3.2.3 Ethernet tail 56
3.2.4 GNSS time data analysis method 57
4 Parameter interfaces 58
4.1 Network connection 58
4.1.1 Source 58
4.1.2 Destination 59
4.2 Functional settings 60
4.3 State settings 63
4.4 Time sync 64
4.5 Lidar info 65
4.6 Operation Statistics 65
4.7 Upgrade 66
5 Maintenance 67

6 Troubleshooting 69
Appendix A: Channel distribution data 72
A.1 Angular position and performance 72
A.2 Angle correction file 79
Appendix B: Absolute time of point cloud data 81
B.1 Source of absolute time 81
B.1.1 GNSS as the clock source 81
B.1.2 PTP as the clock source 82
B.2 Absolute time of the Point Cloud Data Packets 83
B.3 Start time of each block 83
B.4 Laser firing time of each channel 84
Appendix C: Power supply requirements 86
C.1 Input voltage 86
C.1.1 Estimate the cable voltage drop 86
C.1.2 Avoid overvoltage 87
C.2 Input power 88
C.3 Power up/down 88
Appendix D: Optical center offset correction 89
D.1 Cause for correction 89
D.2 Definition of correction 89
D.3 Formula 91
Appendix E: Legal notice 92

About this manual

Please make sure to read through this user manual before your first use and follow the instructions herein when you operate the product. Failure to comply with the instructions may result in product damage, property loss, personal injuries, and/or a breach of warranty.

Access to this manual

To obtain the latest version, please do one of the following:

- Visit the Download page of Hesai's official website: https://www.hesaitech.com/downloads/
- Contact your sales representative of Hesai.
- Contact Hesai technical support at service@hesaitech.com.

Technical support

If your question is not addressed in this user manual, please contact us at:

- service@hesaitech.com
- https://www.hesaitech.com/technical-support/
- https://github.com/HesaiTechnology

Legends and format

Warnings: Instructions that must be followed to ensure safe and proper use of the product.

Notes: Additional information that may be helpful.

Names of data fields are in monospace font.

For example: `Distance` represents the Distance field.

Safety notice

- Please make sure to read through this safety notice and follow all the instructions and warnings. Failure to comply with the instructions and warnings may result in product damage, property loss, and/or personal injuries.
- Please check the certification information on the product's nameplate. If an agreement has been made not to present certification information on the nameplate, please follow the agreed-to arrangements.
- If you incorporate this lidar product into your product(s), you are required to provide this user manual (or access to this user manual) to the intended users of your product(s).
- This lidar product is intended as a component of an end product. The end-product supplier is responsible for assessing the risk of use in accordance with applicable standards and informing the intended user of safety-related information.
- Should there be other agreements with specific users, the other agreements shall apply.
- Before using a product, please confirm with Hesai the development maturity of the product in a timely manner. For products still in development, Hesai makes no warranty of non-infringement nor assumes any responsibility for quality assurance.

Special warnings

Laser safety

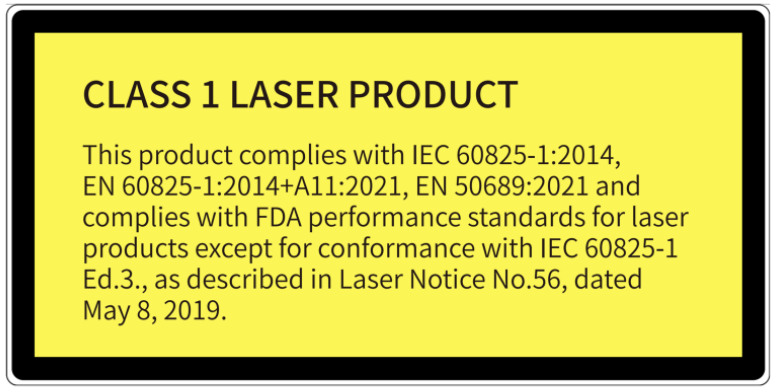

Hot surface

Hot parts!
Burned fingers when handling the parts.
Wait one-half hour after switching off before handling the parts.

Abnormalities

In any of the circumstances listed below, stop using the product immediately:

- If you suspect malfunctions of or damage to the product, with symptoms such as noticeable noise or vibration.
- If you or people in the nearby environment feel discomfort.
- If any device or equipment in the nearby environment malfunctions.

Meanwhile, contact Hesai or an authorized Hesai service provider for more information on product disposal.

Prohibition of disassembly

Unless expressly agreed to in writing by Hesai, do NOT disassemble the product.

Operating environment

Radio frequency (RF) interference

- Before using the product, make sure to read all the signs and notices on the product enclosure (including the nameplate). If specific users require not presenting certification information on the nameplate, please follow the agreed-to arrangements.

Vibration

- If significant mechanical shocks and vibration exist in the product's operating environment, please contact Hesai's technical support to obtain the shock and vibration limits of your product model. Exposure to over-the-limit shocks or vibration may damage the product.
- Make sure to package the product in shock-proof materials to avoid damage during transport.

Explosive atmosphere and other air conditions

- Do NOT use the product in any area where a potentially explosive atmosphere is present, such as where the air contains high concentrations of flammable chemicals, vapors, or particulates (including particles, dust, and metal powder).
- Do NOT expose the product to environments that have high concentrations of industrial chemicals, including liquefied gases that are easily vaporized (such as helium). Such exposure can damage or impair product functionality.

Chemical environment

Do NOT expose the product to corrosive or strong polar chemical environments (such as liquids or gases), including but not limited to strong acids, strong bases, esters, and ethers. This is to avoid damage to the product (including but not limited to water resistance failure).

Ingress protection (IP)

Please check the product's user manual for its IP rating (refer to Section 1.5 Specifications). Make sure to avoid any ingress beyond that rating.

Operating temperature

Please check the product's user manual for its operating temperature (refer to Section 1.5 Specifications). Make sure not to exceed the operating temperature range.

Recommended storage conditions

Please store the product in a dry and well-ventilated place. The recommended ambient temperature is 23 ± 5°C, with relative humidity between 30% and 70% RH.

Light interference

Certain precision optical instruments may interfere with the laser light emitted from the product. Please check all the instructions for these instruments and take preventive measures if necessary. For example, protective leather covers are provided for certain product models; when these lidars are temporarily not used for measurement, the leather covers can be applied to block laser light emission.

Personnel

Recommended operator qualifications

The product should be operated by professionals with an engineering background or experience in operating optical, electrical, and mechanical instruments. Always follow the instructions in this manual throughout operation. If needed, please contact Hesai for technical support.

Medical device interference

- Some components in the product can emit electromagnetic fields. If the product operators or people in the nearby environment wear medical devices (such as cochlear implants, implanted pacemakers, and defibrillators), make sure to consult the physicians and medical device manufacturers for medical advice, such as determining whether a safe distance from the product is required.
- If you suspect that the product is interfering with your medical device, stop using the product immediately.

Installation and operation

Power supply

- Before powering on the product, make sure the electrical interfaces are dry and clean. Do NOT power on the product in a humid environment.
- Do NOT use damaged or out-of-spec cables or adapters.
- You are recommended to use only the cables and power adapters provided by Hesai. If you are to design, configure, or select the power supply system (including cables) for the product, make sure to comply with the electrical specifications in the product's user manual (refer to Section 1.5 Specifications and the Power Supply Requirements section if available); for technical support, please contact Hesai.
- Please check Section 2.2 Electrical interface and strictly follow the instructions on plugging/unplugging the connector. If abnormalities already exist (such as bent pins, broken cables, and loose threads), stop using the product and contact Hesai technical support.

Eye safety

The product is a Class 1 laser product. It satisfies the requirements of:

- IEC 60825-1:2014
- EN 60825-1:2014+A11:2021
- CONSUMER LASER PRODUCT EN 50689:2021
- 21 CFR 1040.10 and 1040.11 except for deviations (IEC 60825-1 Ed.3) pursuant to Laser Notice No.56, dated May 8, 2019.

CAUTION: Use of controls or adjustments or performance of procedures other than those specified herein may result in hazardous radiation exposure.

CAUTION

- For maximum self-protection, it is strongly warned that users do NOT look into the transmitting laser through a magnifying product (microscope, eye loupe, magnifying glass, etc.).
- This product does not have a power switch. It starts operating once connected to power. During operation, the entire cover lens can be regarded as the product's laser emitting window; looking at the cover lens can be regarded as looking into transmitting laser.

Product enclosure

- Do NOT crush or puncture the product. If the product enclosure is broken, stop using it immediately and contact Hesai technical support.
- Certain product models contain high-speed rotating parts. To avoid potential injuries, do NOT operate the product if the enclosure is loose.
- If the product enclosure consists of fins or grooves, please wear gloves when handling the product. Applying too much pressure with your bare hands may cause cuts, bruises or other injuries.

Drops and burns

The product contains metal, glass, and plastic, as well as sensitive electronic components. If the product is dropped or burnt, stop using it immediately and contact Hesai technical support.

Cover lens

The location of the cover lens is illustrated in Section 1 Introduction.

- Do NOT apply protective film, wax or any other substance on the cover lens.
- To keep the product's cover lens from fingerprints and other stains, do NOT touch the cover lens with bare hands. If the cover lens is already stained, please refer to the cleaning method in Section 5 Maintenance.
- To prevent scratches, do NOT touch the product's cover lens with hard or sharp objects. If scratches already exist, stop using the product and contact Hesai technical support. Severe scratches may affect the quality of the product's point cloud data.

Mounting

- Before operating the product, make sure it is properly and securely mounted. The mounting should prevent the product from leaving its mounting position under external forces (such as collisions, high winds, and stone impacts).
- If the product is installed in a cavity designed as a wet zone, make sure that no water accumulates in the cavity.
- Before installing any exterior part, please ensure that each exterior part and its movable area do not overlap the Field of View (FOV) of the lidar.

The lidar's FOV is the spatial angular range bounded by the horizontal and vertical FOV ranges (see Section 1.5 Specifications); the distance to the origin of the lidar's coordinate system is not limited. For inquiries about the FOV, please contact Hesai technical support.

Hot surface

During operation or the time period after the operation, the product's enclosure can be hot.

- To prevent discomfort or even burns, do NOT touch the product's enclosure with your skin.
- To prevent fires, make sure to keep flammable materials away from the product's enclosure.

Certain product models support active heating of the cover lens to reduce the impact of ice and frost.

- While active heating is ON, the cover lens can be hot. To prevent discomfort or even burns, avoid direct skin contact with the cover lens.
- When the cover lens is free of ice and frost, you may turn off active heating.

Peripherals

The product may be used along with accessories and devices, such as suction cup mounts, extension cables, power supplies, network devices, GNSS/PTP devices, CAN transceivers, and cleaning equipment.

When selecting a peripheral, please refer to all relevant specifications in the product's user manual or contact Hesai technical support. Using out-of-spec or unsuitable devices may result in product damage or even personal injuries.

Firmware and software upgrading

Make sure to use only the upgrade files provided by Hesai. Make sure to observe all the instructions provided for that upgrade file.

Customized firmware and software

- Before using a customized version of firmware and software, please fully understand the differences in functions and performance between the customized version and the standard version.
- Make sure to strictly follow all the instructions and safety precautions provided for that customized version. If the product does not function as anticipated, stop using the product immediately and contact Hesai technical support.

Point cloud data processing

- Certain product models support one or more point cloud data processing functions, including but not limited to: Noise Filtering, Interstitial Points Filtering, Retro Multi-Reflection Filtering, and Nonlinear Reflectivity Mapping.
- These functions are configurable and are intended only to assist the user in extracting information from the point cloud data. Users are in full control of whether to use any of these functions. Moreover, users are responsible for analyzing the product's intended application scenarios and evaluating the risk of enabling one or more of these functions in combination.
- To learn about the supported functions of a product model, please contact Hesai technical support.

Repair

- Unless expressly agreed to in writing by Hesai, do NOT disassemble, repair, modify, or alter the product by yourself or through any third party. Such a breach:
  - can result in product damage (including but not limited to water resistance failure), property loss, and/or injuries;
  - shall constitute a breach of warranty.
- For more product repair issues, please contact Hesai or an authorized Hesai service provider.

1 Introduction

1.1 Applicability

This manual applies to the following versions:

Software	15.AF.B0.00.02.Y or later
Firmware of Sensor	2.b.0692 or later
Firmware of Controller	1.b.0028 or later

1.2 Operating principle

Distance measurement: Time of Flight (ToF)

1. A laser diode emits a beam of ultrashort laser pulses onto the target object.
2. The laser pulses are reflected after hitting the target object. The returning beam is detected by an optical sensor.
3. Distance to the object can be accurately measured by calculating the time between laser emission and receipt.

$d = \frac{ct}{2}$	d: Distance c: Speed of light t: Travel time of the laser beam

1.3 Basic structure

The basic structure is shown in Figure 1.
Multiple pairs of laser emitters and receivers are attached to a motor that rotates 360° horizontally.

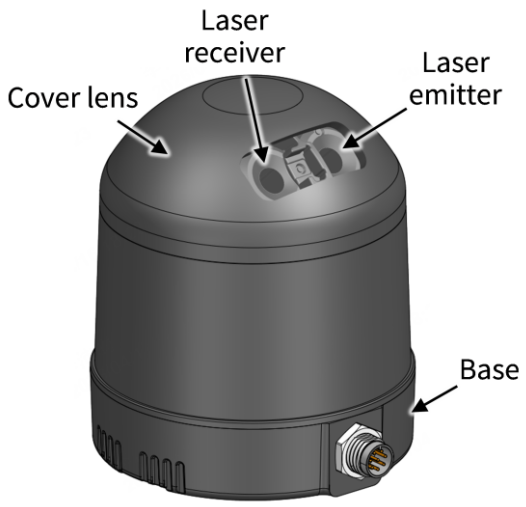

Figure 1. Partial cross-sectional diagram

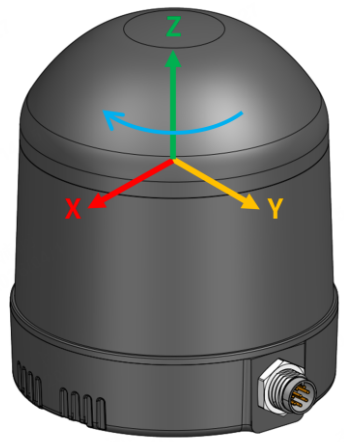

Figure 2. Coordinate system (axonometric view)

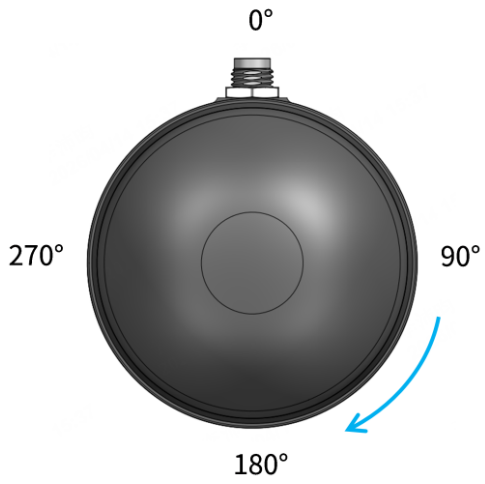

Figure 3. Lidar azimuthal position (top view)

The lidar's coordinate system is illustrated in Figure 2.

- Z-axis is the axis of rotation.

The lidar's azimuthal position is defined in Figure 3.

- By default, the lidar rotates clockwise in the top view.
- Y-axis corresponds to 0°.
- Each laser channel has an intrinsic azimuth offset. The horizontal center of the emitter-receiver array defines the lidar's azimuthal position.

For example, when the horizontal center passes the 90° position, the lidar is at the 90° position, and the azimuth of the corresponding data block in the Point Cloud Data Packet is 90°.

1.4 Channel distribution and coordinate systems

All channels are unevenly distributed, as illustrated in Figure 4.

- The vertical angles indicated in Figure 4 are projections onto the plane; for the design value of each channel's vertical angle in space, see Appendix A Channel distribution data.
- Vertical resolution: See Section 1.5 Specifications.

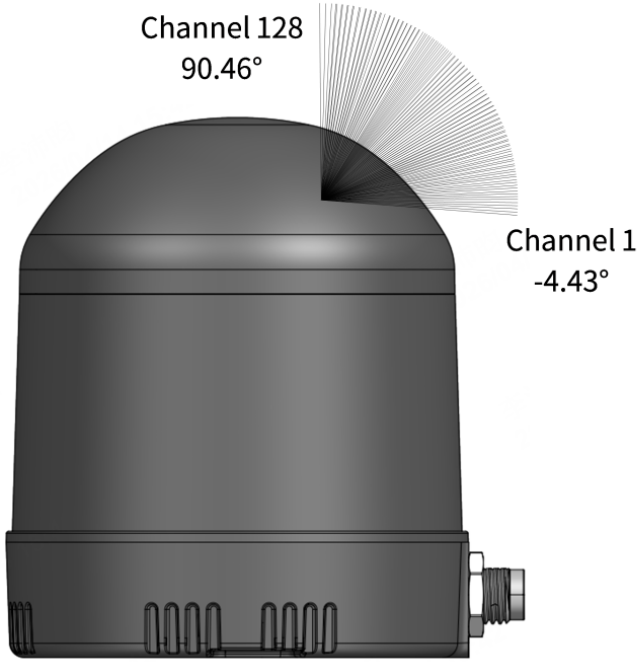

Figure 4. Channel vertical distribution

Each channel has an intrinsic angle offset, both horizontally and vertically. These angles are recorded in this lidar unit's angle correction file.

Angle correction file

- The file is usually provided when shipping.
- In case you need to obtain this file again, please do one of the following:
  - See the API Reference Manual.
  - Ask Hesai technical support or your sales representative.

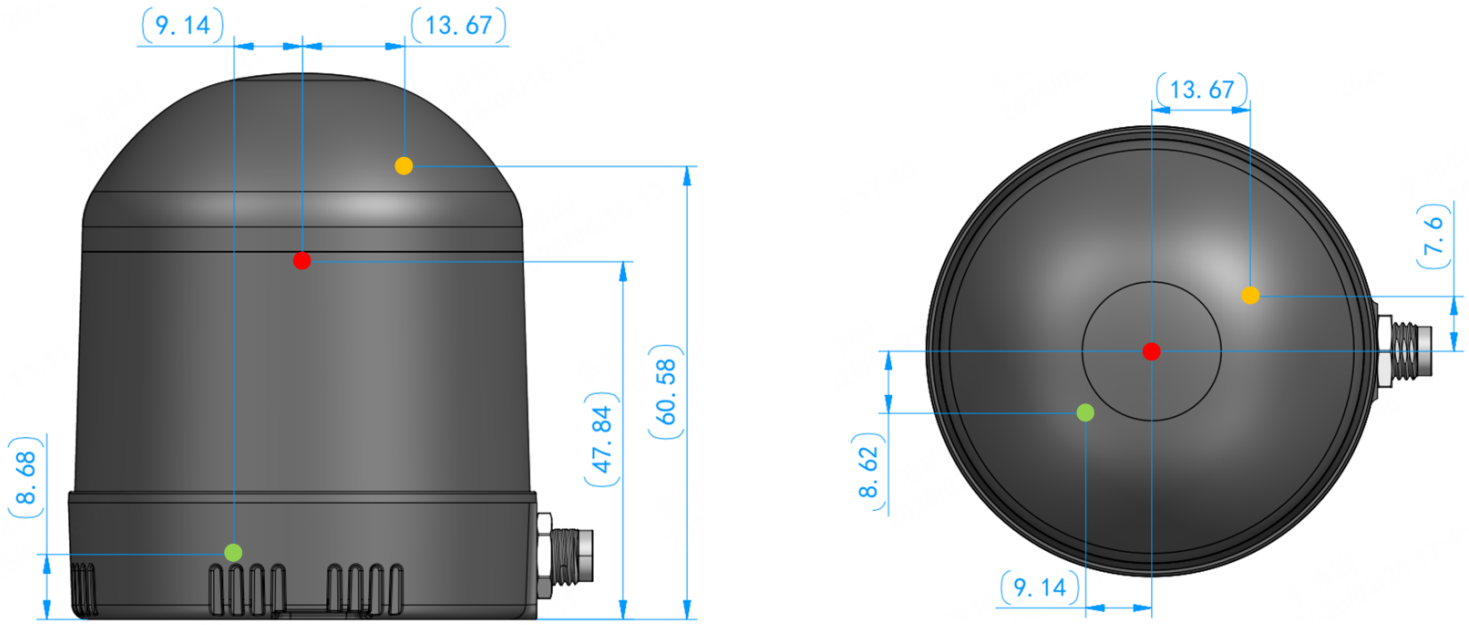

Figure 5. Laser firing position and IMU coordinate system (unit: mm)

In Figure 5:

- The origin of the lidar's coordinate system is marked as a red dot.
- At the 0° azimuthal position, the optical center (also the center of exit diaphragm) is marked as a yellow dot.
  - The distance measurements and the elevation of each channel are relative to the optical center.
  - These can be converted to be measurements relative to the origin; see Appendix D Optical center offset correction.
- The origin of the lidar's IMU coordinate system is marked as a green dot.
  - The IMU measurements are relative to the origin.
  - The origin is used for extrinsic calibration.

1.5 Specifications

SENSOR

Scanning method	Mechanical rotation
Number of channels	128
Instrumented range	0 to 60 m
Ranging capability	40 m (at 10% reflectivity, for all channels)
Ranging accuracy ①	±3 cm (typical)
Ranging precision ①	2 cm (typical)
Horizontal FOV	360°
Horizontal resolution	0.4° (10 Hz) 0.8° (20 Hz)
Vertical FOV ②	95° (-4.4° to 90.5°)
Vertical resolution	0.74° (average)
Frame rate	10/20 Hz
Return mode	**Single return:** First/Strongest/Last **Dual return:** Last and Strongest (default) / Last and First / First and Strongest

MECHANICAL/ELECTRICAL/OPERATIONAL

Wavelength	905 nm
Laser class	Class 1 Eye Safe
Ingress protection	IP6K7

Dimensions	Height: 73.05 mm Bottom: Φ62.55 mm
Rated voltage range ③	DC 9 to 32 V
Power consumption ④	8.4 W
Operating temperature ⑤	-20°C to 65°C
Storage temperature ⑤	-40°C to 85°C
Weight	＜265 g

DATA I/O

Data transmission	Standard 100Base-TX
Measurements	Distance, azimuth angle, and reflectivity
Valid point rate ⑥	**Single Return:** 1 152 000 points/sec **Dual Return:** 2 304 000 points/sec
Point cloud data rate ⑦	**Single Return:** 41.26 Mbps **Dual Return:** 82.51 Mbps
Clock source	GNSS/PTP (1588v2 over UDP/IP, 1588v2 over L2, 802.1AS, 802.1AS Automotive)

Specifications are subject to change. Please refer to the latest version of this manual.

Notes to specifications

① **Ranging accuracy and ranging precision**	• May vary with range, temperature, and target reflectivity. • Ranging accuracy: the average measurement error over multiple measurements taken under the same conditions • Ranging precision: the standard deviation of multiple measurements taken under the same conditions
② **Vertical FOV**	Vertical angles' projections onto the plane, not the ones in space.
③ **Rated voltage range**	The input voltage at the lidar's connector shall be within 9 to 32 V DC.
④ **Power consumption**	Typical value • Not including accessories such as the connection box. • Test conditions: 25°C ambient temperature, 10 Hz frame rate. • The external power supply should be able to provide at least 2.6 A, 30 W.
⑤ **Operating temperature and storage temperature**	• Both refer to ambient air temperature. • During operation, the lidar's surface and internal temperatures may exceed the ambient air temperature. • To obtain the real-time temperature headroom of an internal location, refer to Get Lidar Status (0x09) in the TCP API Reference Manual.

⑥ **Valid point rate**	• Defined as the point cloud data points (number of returns) generated per second.
	• In **Single Return Mode**:
	  ◦ Given: horizontal FOV (360°), horizontal resolution (0.4° at 10 Hz), number of channels (128), and frame rate (10 Hz).
	  ◦ At 10 Hz, each channel generates 360/0.4 = 900 points per frame; all channels generate 900 × 128 = 115 200 points per frame, and 1 152 000 points (10 frames) per second.
	• In **Dual Return Mode**, the point rate is twice that in **Single Return Mode**.

⑦ **Point cloud data rate**	• In **Single Return Mode**: ◦ Given: horizontal FOV (360°), horizontal resolution (0.4° at 10 Hz), frame rate

(10 Hz), size of a Point Cloud Data Packet (1146 bytes) and the number of blocks in each packet (2)
  - At 10 Hz, one return is generated for each 0.4° azimuth; thus 900 (360°/0.4°) returns for each frame and 9000 returns (10 frames) per second.
  - Each Point Cloud Data Packet contains two blocks, and each block stores one return.
  - Therefore, 9000/2 = 4500 packets are transmitted per second, totaling 4500 × 1146 bytes.
  - With unit conversion, point cloud data rate = 4500 × 1146 × 8 × 1E-6 ≈ 41.26 Mbps.
- In **Dual Return Mode**, point cloud data rate is twice that in **Single Return Mode** (≈ 82.51 Mbps).

2 Setup

Before operating the lidar, strip away the protective cover on the cover lens.

> The information in this section may be different for customized models. The mechanical drawings and data exclusively provided for customized models shall prevail.

2.1 Mechanical installation

2.1.1 Exterior dimensions

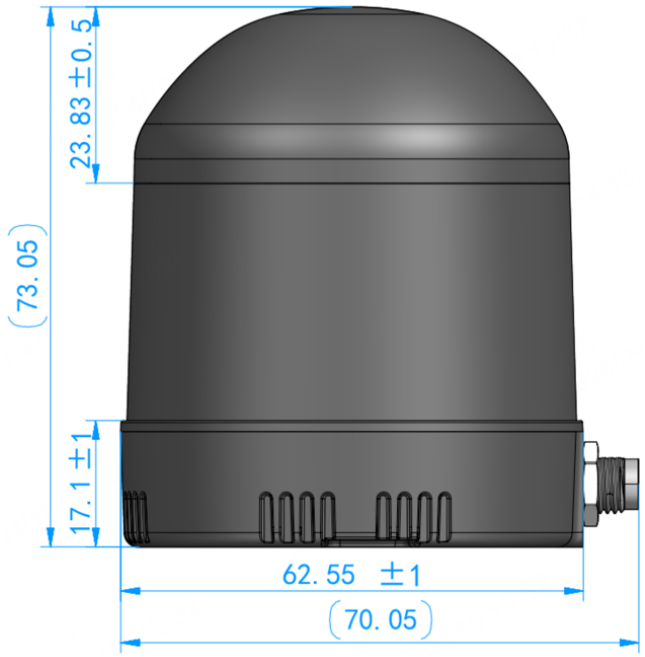

Figure 6. Right side view (unit: mm)

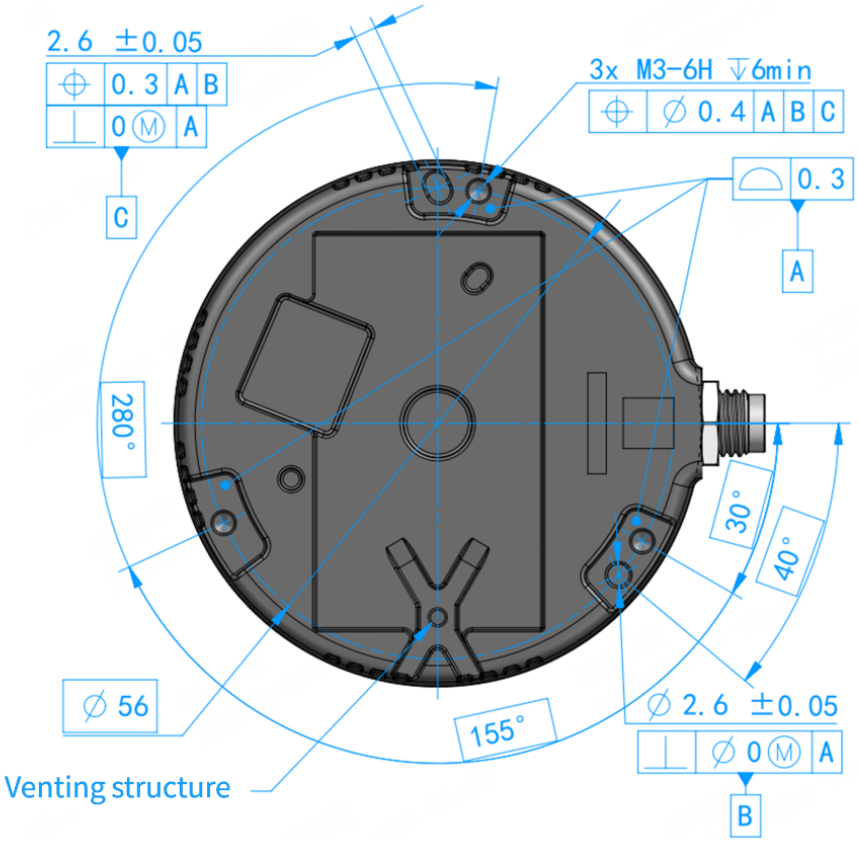

Figure 7. Bottom view (unit: mm)

2.1.2 Recommended installation

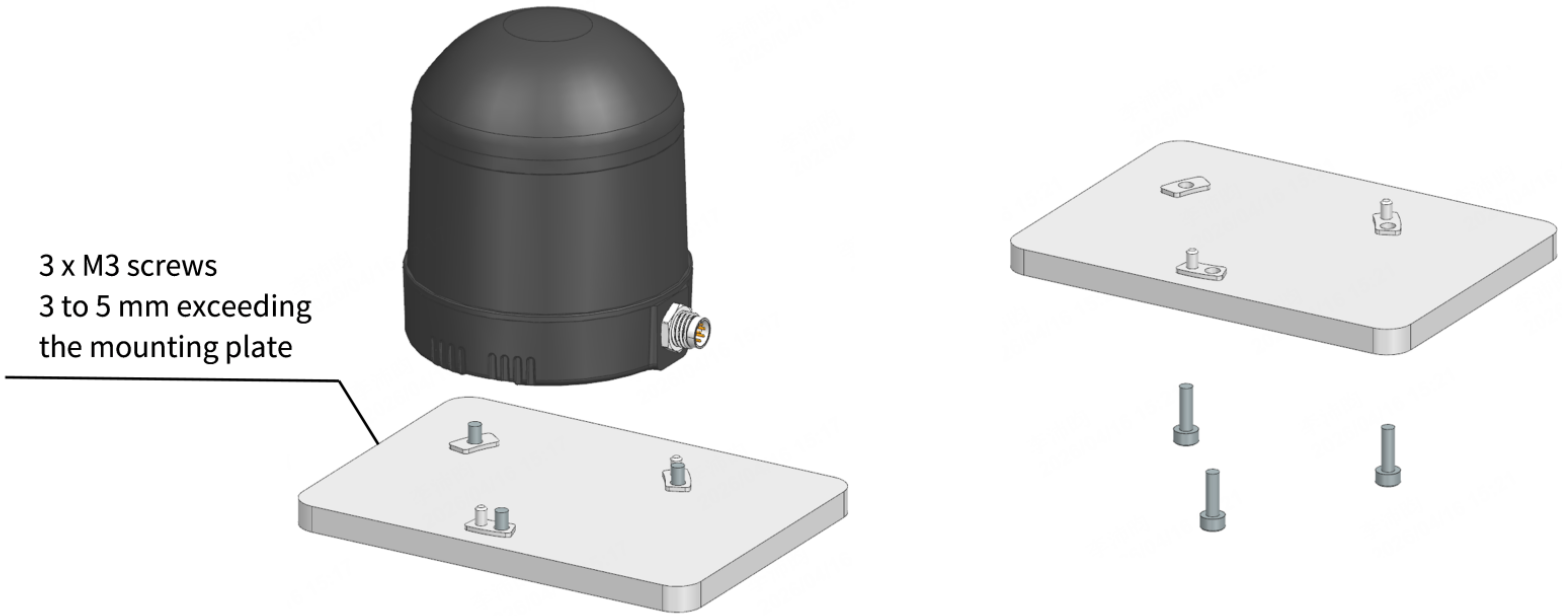

Figure 8. Recommended installation

To maximize data integrity and ESD protection, chassis grounding is strongly recommended:

- Mount the lidar on a properly grounded metal bracket.
- Ensure reliable electrical continuity between the lidar enclosure, the mounting screws, and the bracket.

In installations where chassis grounding is impractical or impossible (e.g., battery-powered or airborne platforms), high-quality shielded twisted pair (STP) Ethernet cables with properly grounded connectors is a recommended alternative.

2.1.3 Notes on screw installation

Strictly follow the screw specifications and installation requirements in Figure 8.

Screw type

SEMS screws (with pre-attached flat washers and lock washers) are recommended. Property class should be at least 4.8.

Screw torque

- The base material of the threaded holes is aluminum alloy, not steel.
- The recommended screw torque: 0.8 to 1 Nm

Thread service life

- Ten times. (Each screwing counts as one time, so as each unscrewing.)
- If threadlocker is used, clean the threaded hole before each retightening. Avoid contact between the cover lens and the cleaner.

2.2 Electrical interface

The lidar uses a Signal Electronics M8 series connector (male socket, on the lidar).

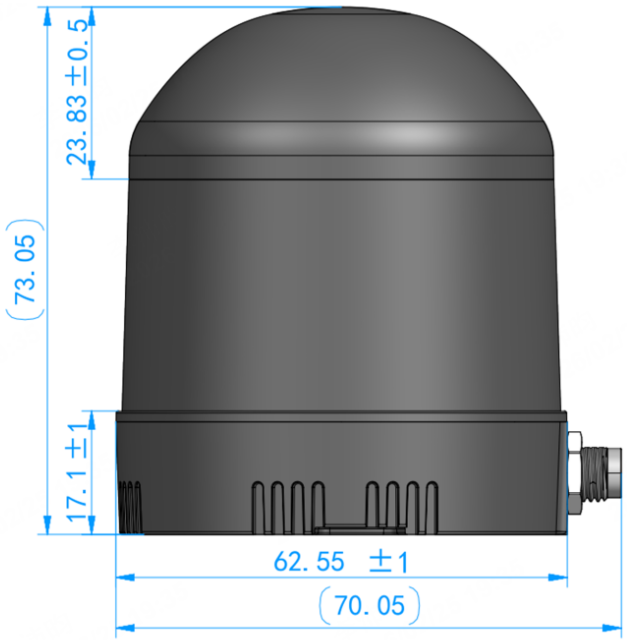

Figure 9. Connector right side view (unit: mm)

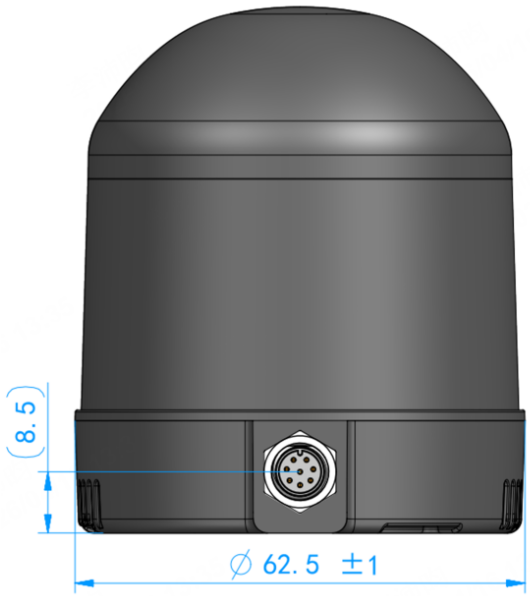

Figure 10. Connector front view (unit: mm)

2.2.1 Pin description

See Section 2.3.1 Ports.

Timing requirements of GNSS signals (PPS and NMEA)

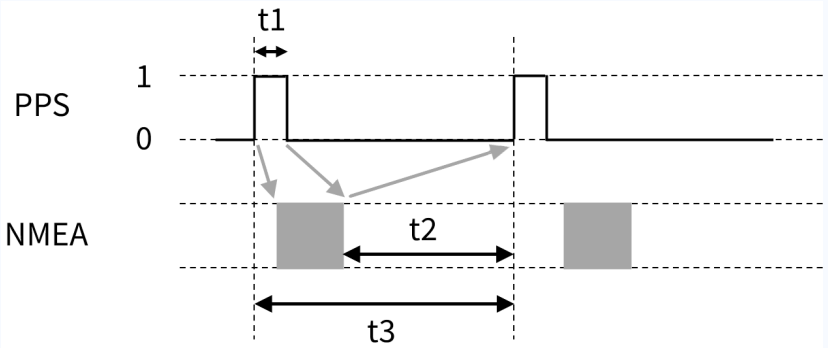

Cycle of the PPS signal	t3 = 1 s ± 50 µs (rising edge to rising edge)
Pulse width of the PPS signal	t1 ⩾ 1 ms Recommended range: 10 to 100 ms
Timing relationship	As indicated by the gray arrows, the NMEA signal: • Should **start** after the PPS **rising** edge of the current second. • Should **end** after the PPS **falling** edge of the current second. • Should **end** before the PPS **rising** edge of the **next** second; t2 ⩾ 100 ms.

2.2.2 Connector use

Connection	1. Turn off the power source. 2. Align the slot on the cable's plug with the protrusion of the lidar socket. 3. Insert the plug straight into the socket until fully seated. 4. Rotate the coupling nut clockwise to tighten it. 5. Set a torque wrench to 0.4 Nm and further tighten the coupling nut.
Disconnection	1. Turn off the power source. 2. Rotate the coupling nut counterclockwise to loosen it. 3. Hold the plug's shell and pull the plug straight from the socket (avoiding twisting or bending).

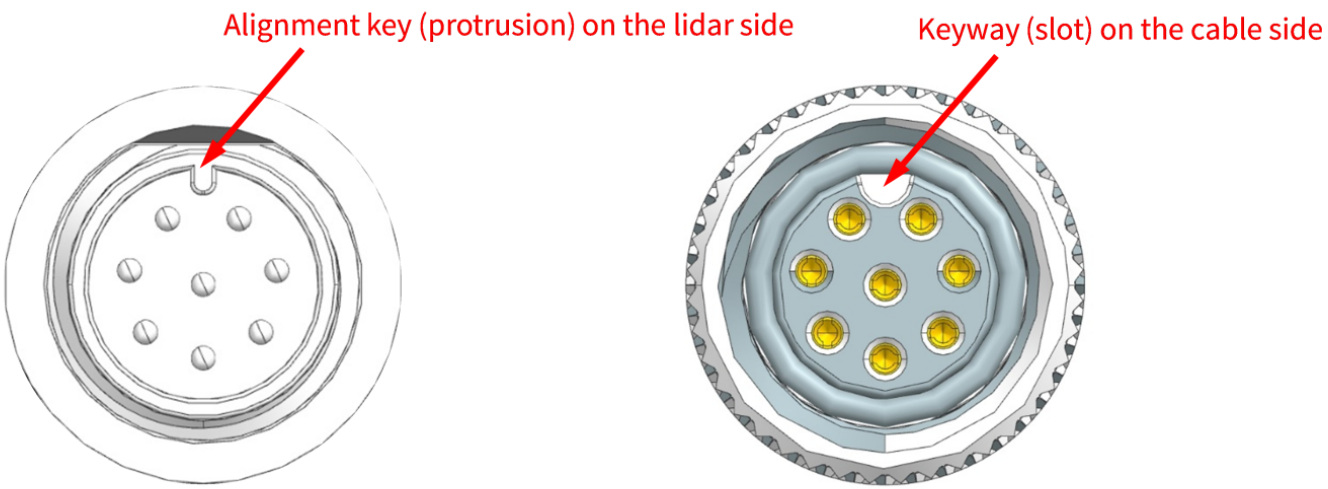

Figure 11. Connector use

- Before connection, check the pins on the socket and the holes on the plug. In case of bent pins or damaged holes, stop using the connector and contact technical support.
- To prevent breakdowns, turn off the power source before connection and disconnection.
- Do NOT attempt to force open a connection by pulling on the cables or by twisting the connectors in any way. Doing so can loosen the connectors' shells, or even damage the contacts.
- If a right-angle connector is used, the joint between the cable and the connector's overmolded part (see arrow in Figure 12. 1-to-3 splitter cable (unit: mm)) can only withstand a lateral force of less than 40 N.
- If the connector's shell is accidentally pulled off, stop using the connector and contact Hesai technical support. Do NOT attempt to assemble the connector's shell and cable collet; do NOT connect a connector without its shell. Doing so may damage the lidar's circuits.
- For further troubleshooting, please contact Hesai technical support or obtain work instructions from the connector manufacturer.

2.3 Cable

Users can connect the lidar directly.

- Outer diameter (OD) = 5.50 ± 0.20 mm
- Minimum bend radius: 5 × OD

> The default cable length and CNN1 rotation angle are shown in the image. Should there be other agreements with specific users, the other agreements shall prevail.

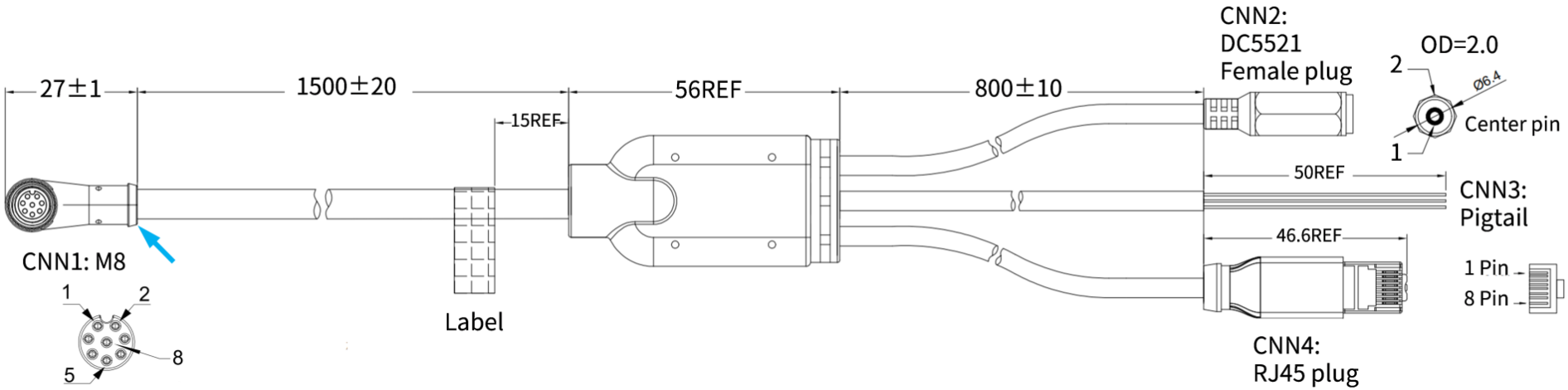

Figure 12. 1-to-3 splitter cable (unit: mm)

2.3.1 Ports

Avoid touching the reserved wires or ports with bare hands.

Port	Pin number	Wire color	Signal	Wire gauge	Wire color	Pin number	Port	Description
Lidar port CNN1	6	Red	Power	26 AWG	Blue	1	Power port CNN2	9 to 32 V
	1	Black	GND	26 AWG	Black	2		0 V
						-	GNSS CNN3	Ground for external GNSS module
	8	White	GNSS PPS	28 AWG	Blue	-		PPS synchronization signal 3.3 V, rising edge ⩽ 500 ns, recommended pulse width ⩾ 1 ms Cycle: 1 s (from rising edge to rising edge)
	7	Green	GNSS NMEA	28 AWG	Brown	-		Receiving serial data from the external GNSS module RS232 level, -13 to 13 V
	4	Yellow	Ethernet TX+	28 AWG	Orange white	1	Standard Ethernet port CNN4	-1 to 1 V
	5	Blue	Ethernet TX-	28 AWG	Orange	2		
	3	Orange	Ethernet RX+	28 AWG	Blue white	3		
	2	Purple	Ethernet RX-	28 AWG	Blue	6		

Supported GNSS NMEA sentences: GPRMC, GNRMC

2.4 Network settings on the host computer

To analyze point cloud data, configure the network parameters of the host computer:

Network parameters	Value	Description
IP address	192.168.1.**X**	**X** can be selected from 2 to 200 and from 202 to 254.
Subnet mask	255.255.255.0	-
VLAN ID	Range: 1 to 4094	Required only when VLAN tagging is used. Make sure the host computer and the lidar use the same VLAN ID.

2.4.1 In Windows

1. [**Control Panel**] > [**Network and Internet**] > [**Network and Sharing Center**] > [**Change adapter settings**].
2. Right-click [**Ethernet**] or [**Ethernet X**] which shows Ethernet connection (with no red cross at the bottom left of the icon) > Select [**Properties**].

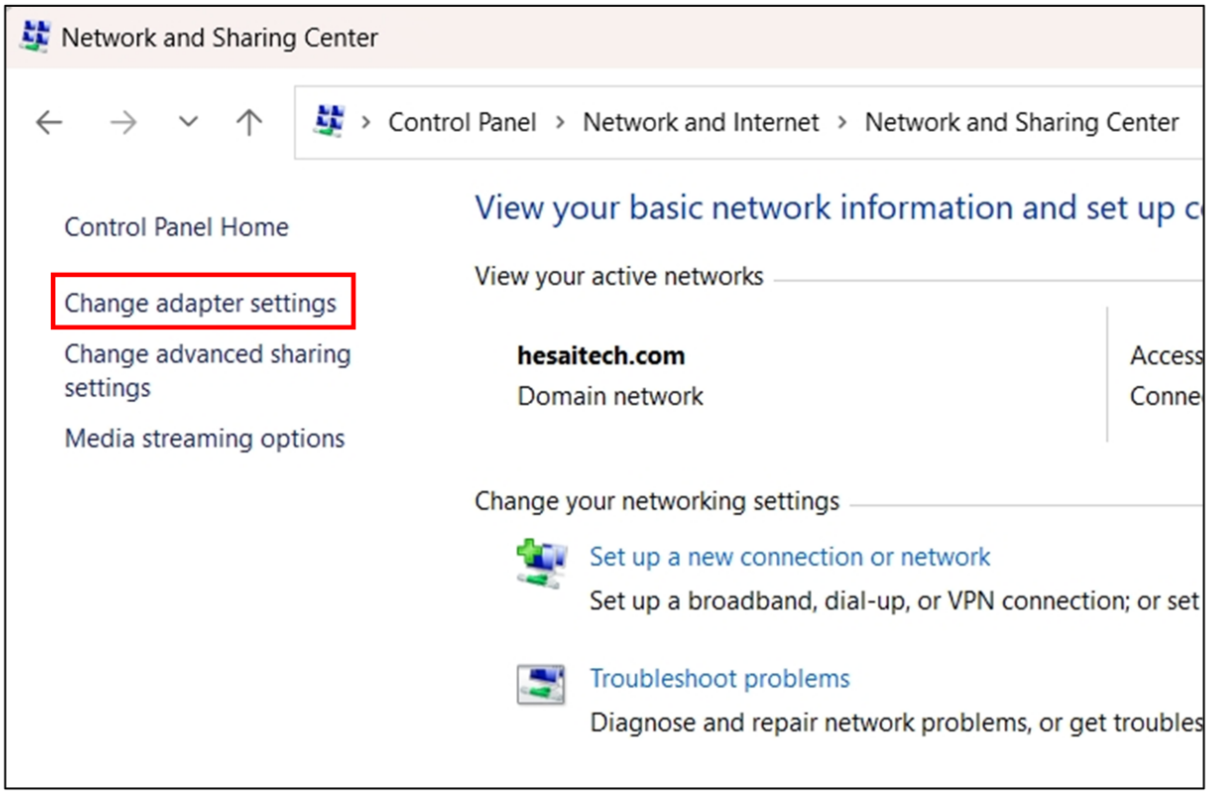
Network and Sharing Center
Control Panel › Network and Internet › Network and Sharing Center
Control Panel Home
Change adapter settings
Change advanced sharing settings
Media streaming options
View your basic network information and set up c
View your active networks
hesaitech.com
Domain network
Access
Conne
Change your networking settings
Set up a new connection or network
Set up a broadband, dial-up, or VPN connection; or set
Troubleshoot problems
Diagnose and repair network problems, or get troubles

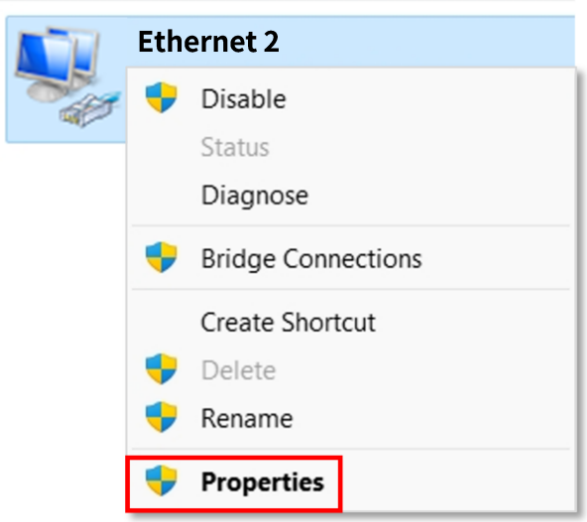
Ethernet 2
Disable
Status
Diagnose
Bridge Connections
Create Shortcut
Delete
Rename
Properties

3. Double-click [**Internet Protocol Version 4 (TCP/IPv4)**].
4. Select [**Use the following IP addresses**] > Input the host computers's IP address and subnet mask.

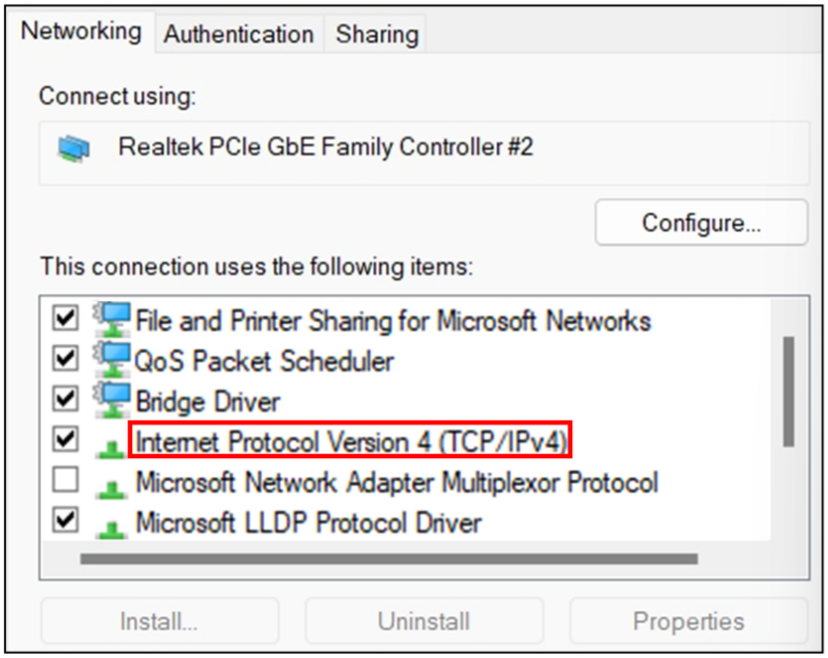

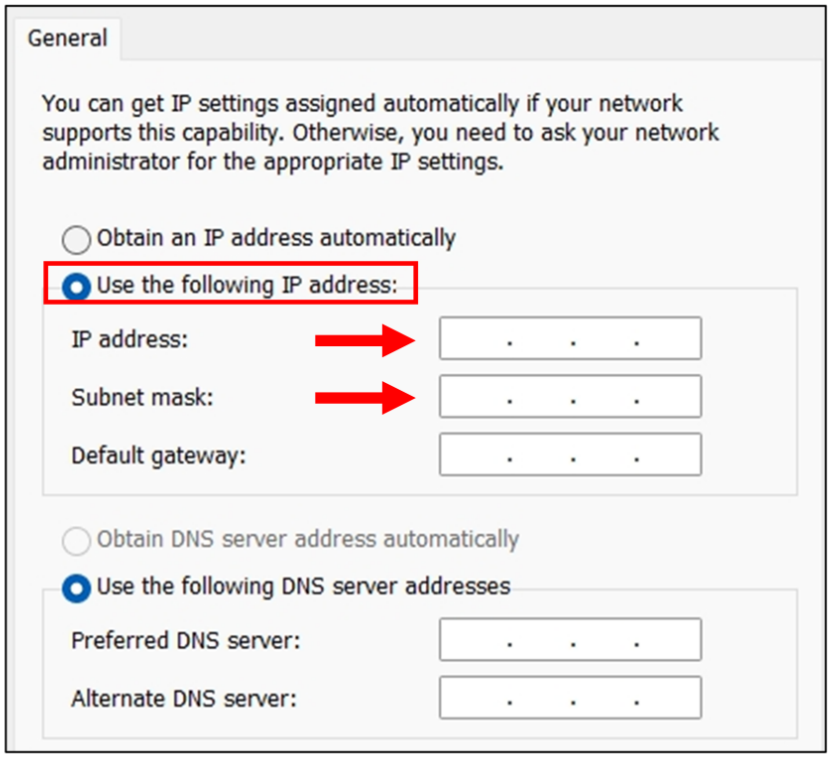

Ping command can be used to check the connection:

1. Press Win + R to open the Run dialog box.
2. Enter "cmd" and click [**OK**] to open the Command Prompt.
3. Enter "ping 192.168.1.201" and check the output.

5. To enable VLAN tagging:
   Click [**Configure**] > Under the [**Advanced**] tag, select [**VLAN ID**] from the [**Property**] list > Input a VLAN ID in the [**Value**] box > Click [**OK**].

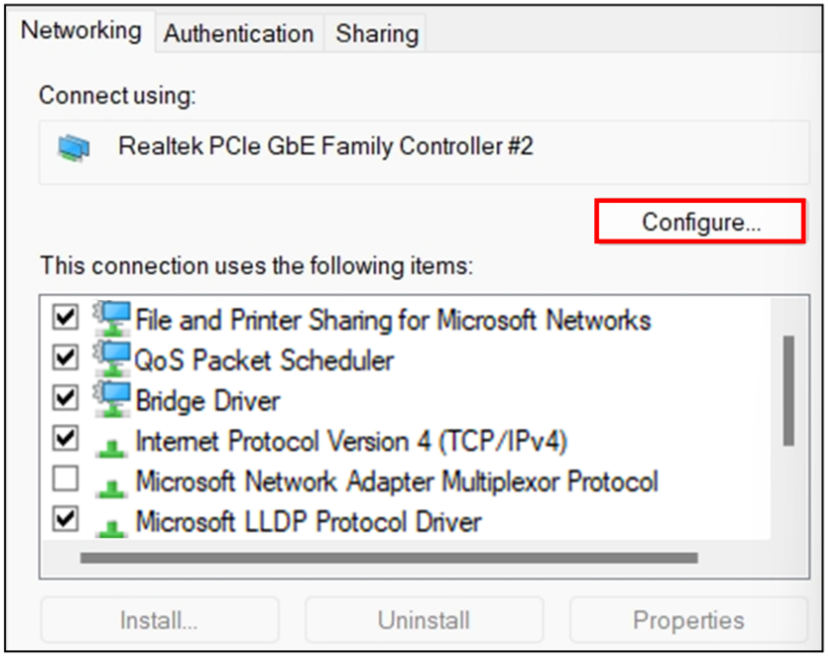

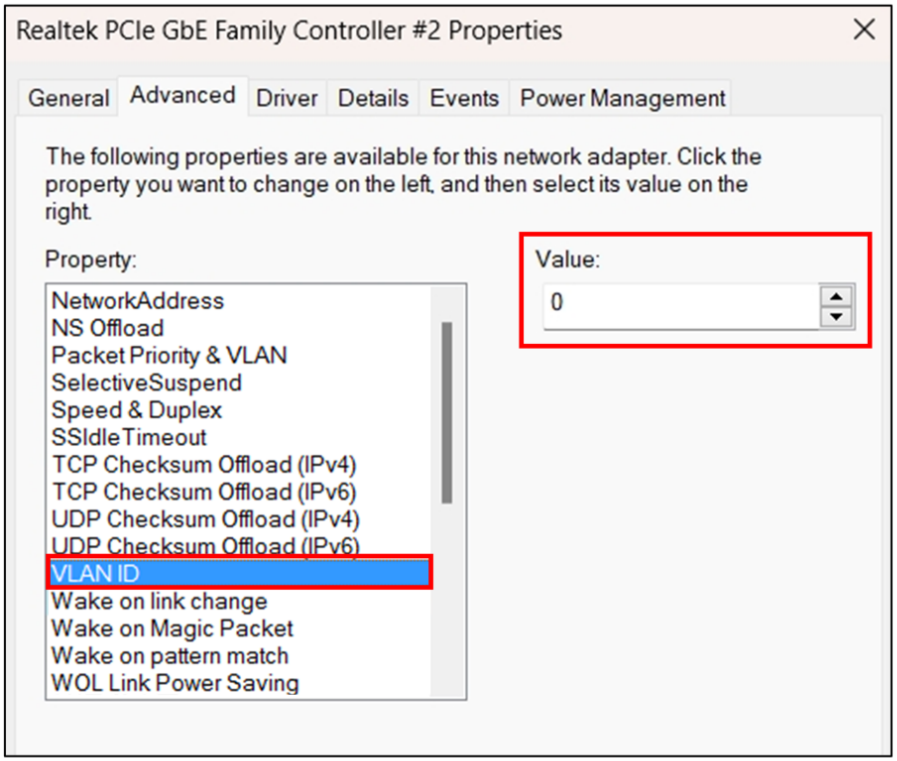

If the [**Property**] list has no [**VLAN ID**], it is recommended to update the network adapter driver.

2.4.2 In Ubuntu

1. Find the host computer's network interface name.

   Method 1

   a. Open **Settings — Network**.
   b. Look for the interface whose status is "Connected".
   The name in parentheses after "Ethernet" is the network interface name.

   Method 2

   a. Open a terminal and run this command:

```
ifconfig
```

   b. Look for the interface with non-zero RX packets and bytes.
   (In the example below, **enp5s0** shows non-zero Rx packets and bytes, indicating active data transmission.)

```
❯ ifconfig
docker0: flags=4099<UP,BROADCAST,MULTICAST>  mtu 1500
        inet [redacted] netmask [redacted] broadcast [redacted]
        ether [redacted] txqueuelen 0  (Ethernet)
        RX packets 0  bytes 0 (0.0 B)
        RX errors 0  dropped 0  overruns 0  frame 0
        TX packets 0  bytes 0 (0.0 B)
        TX errors 0  dropped 0 overruns 0  carrier 0  collisions 0

enp2s0f0: flags=4099<UP,BROADCAST,MULTICAST>  mtu 1500
        ether [redacted] txqueuelen 1000  (Ethernet)
        RX packets 0  bytes 0 (0.0 B)
        RX errors 0  dropped 0  overruns 0  frame 0
        TX packets 0  bytes 0 (0.0 B)
        TX errors 0  dropped 0 overruns 0  carrier 0  collisions 0

enp5s0: flags=4099<UP,BROADCAST,MULTICAST>  mtu 1500
        ether [redacted] txqueuelen 1000  (Ethernet)
        RX packets 267706980  bytes 300970909734 (300.9 GB)
        RX errors 0  dropped 0  overruns 0  frame 0
        TX packets 3184  bytes 590575 (590.5 KB)
        TX errors 0  dropped 0 overruns 0  carrier 0  collisions 0
```

When not using VLAN

2. Run this command in the terminal:

```
sudo ifconfig ${interface_name} ${ip_addr}
```

   - Replace `${interface_name}` with the host computer's network interface name.
   - Replace `${ip_addr}` with the host computer's IP address.

When using VLAN

2. Run this command in the terminal:

```
sudo ip link add link ${interface_name} name ${interface_name}.${vlan_id} type vlan id ${vlan_id}
sudo ip link set up ${interface_name}.${vlan_id}
sudo ip addr add ${ip_addr}/24 dev ${interface_name}.${vlan_id}
ip addr show ${interface_name}.${vlan_id}
```

- Replace `${interface_name}` with the host computer's network interface name.
- Replace `${vlan_id}` with the host computer's VLAN ID.
- Replace `${ip_addr}` with the host computer's IP address.

2.5 Tools

- The following tools are supported by most models. Contact Hesai technical support to confirm applicability.
- For a customized model or an early prototype, contact Hesai technical support to confirm applicability.

Tool	Purpose	Where to find it
PandarView 2 (point cloud visualization software)	To record and display point cloud data.	Public versions (for selected models only): https://www.hesaitech.com/downloads/
LidarUtilities (software for host computers)	To set parameters, check device info and status, or upgrade firmware and software.	Contact Hesai technical support for details.
API		Contact Hesai technical support to confirm the API applicable to this model and obtain the corresponding documentation.
Software development kits (SDKs) and ROS drivers	To assist development.	Public versions (for selected models only): https://github.com/HesaiTechnology
Web control	To set parameters, check device info and status, or upgrade firmware and software.	If this model supports web control, see the "Web Control" section of this manual.

3 Data structure

Unless otherwise specified, all the multi-byte fields are unsigned values transmitted in little-endian format.

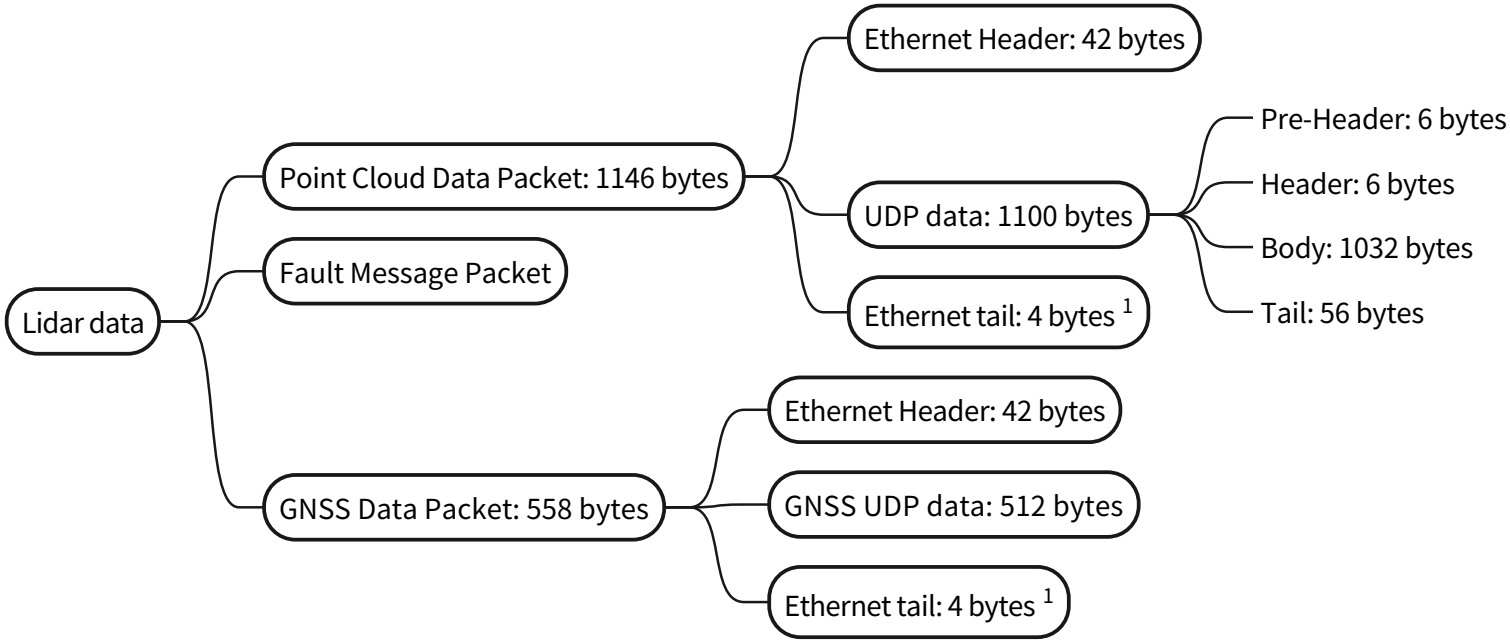

1. Network monitoring software (such as WireShark) usually does not display the **Ethernet tail** (4 bytes).

Figure 13. Data structure

The data format of the Fault Message Packet is described in the Diagnostic Manual. Please contact Hesai technical support for more information.

3.1 Point Cloud Data Packet

3.1.1 Ethernet Header

Transmitted in big-endian format.

Point Cloud Data Packet: Ethernet Header

Field	Byte(s)	Description
Ethernet II MAC	12	Destination MAC: xx:xx:xx:xx:xx:xx (FF:FF:FF:FF:FF:FF for broadcast) Source MAC: xx:xx:xx:xx:xx:xx
Ethernet Data Packet Type	2	0x08, 0x00
Internet Protocol	20	Protocol parameters
UDP Port Number	4	Source port (default: 10000) Destination port (default: 2368)
UDP Length	2	Eight bytes more than point cloud UDP data (see Figure 13. Data structure).
UDP Checksum	2	Checksum of the Ethernet Header

3.1.2 Point cloud UDP data

Pre-Header

Field	Byte(s)	Description
Start of Packet	1	0xEE
Start of Packet	1	0xFF
Protocol Version Major	1	Main class of the point cloud UDP packet structure Current value: 0x01
Protocol Version Minor	1	Subclass of the point cloud UDP packet structure Current value: 0x04
Reserved	2	-

Header

Field	Byte(s)	Description
Channel Num	1	Fixed: 0x80 (128)
Block Num	1	Fixed: 0x02 (2)
Reserved	1	-
Dis Unit	1	Fixed: 0x04 (4 mm)
Return Num	1	Number of returns that each channel generates One return: 0x01 (1) Two returns: 0x02 (2)

<table>
<tr><th>Field</th><th>Byte(s)</th><th>Description</th></tr>
<tr><td>Flags</td><td>1</td><td>Each bit indicates whether this data packet contains certain information.
<table>
<tr><th>Bit</th><th>Description</th></tr>
<tr><td>[7:6] Reserved</td><td>-</td></tr>
<tr><td>[5] Confidence</td><td>1 — YES
0 — NO</td></tr>
<tr><td>[4:2] Reserved</td><td>-</td></tr>
<tr><td>[1] IMU</td><td>1 — YES (fixed)
0 — NO</td></tr>
<tr><td>[0] UDP Sequence</td><td>1 — YES (fixed)
0 — NO</td></tr>
</table></td></tr>
</table>

Body

Return mode

The available return mode(s) are listed in the `Return Mode` field in Section 3.1.2.4 Tail.

In Single Return mode, the measurements of each round of firing are stored in one block.

In Dual Return mode, the measurements of each round of firing are stored in two adjacent blocks (see table below), and the `Azimuth` fields of these two blocks are the same.

Return mode	Odd-numbered block	Even-numbered block	Note
Last and Strongest	Last return	Strongest return	If the last return is also the strongest, then the even-numbered block stores the second strongest return.
Last and First	Last return	First return	If there is only one return, then the two blocks store the same data.
First and Strongest	First return	Strongest return	If the first return is also the strongest, then the even-numbered block stores the second strongest return.

Field	Byte(s)	Description
Azimuth 1	2	For Block 1: Current reference angle of the azimuth Unit: 0.01°
Block 1	512	Measurements made by each channel (starting from Channel 1) Refer to Each block in the Body.
Azimuth 2	2	For Block 2: Current reference angle of the azimuth Unit: 0.01°
Block 2	512	Measurements made by each channel (starting from Channel 1) Refer to Each block in the Body.

Field	Byte(s)	Description
CRC	4	CRC-32/MPEG-2 checksum of the Body For more on the CRC-32/MPEG-2 computation algorithm, refer to: https://www.mathworks.com/matlabcentral/fileexchange/72226-crc-32-mpeg-2-computation-algorithm

Each block in the Body

Field	Byte(s)	Description
Channel 1	4	Measurements of Channel 1 **Field** / **Byte(s)** / **Description** Distance / 2 / Object distance = `Distance` × `Dis Unit` `Dis Unit` is specified in Section 3.1.2.2 Header. Reflectivity / 1 / Range: 0 to 255 0 to 255 linearly represents target reflectivity 0 to 255%. Reflectivity = `Reflectivity` Field × 1% Confidence / 1 / This field is added only when bit[5] = 1 in the `Flags` field of the Header. This field is shown as "WeightFactor" in PandarView 2. [7:6] Cover Lens Contamination Level • Range: 0 to 3 • Higher value indicates more contamination. [5:0] Discrete noise point level • Range: 0 to 63 • The higher the value, the more likely this data point is a discrete noise point (e.g., rain, fog, dust, or exhaust fumes).
Channel 2	4	Measurements of Channel 2
…	…	…
Channel 128	4	Measurements of Channel 128

Tail

Field	Byte(s)	Description
Reserved	11	-
Working Mode	1	1 — Standby 0 — In operation
Return Mode	1	0x33 — First 0x37 — Strongest 0x38 — Last 0x39 — Last and Strongest (default) 0x3B — Last and First 0x3C — First and Strongest
Motor Speed	2	Unit: 0.1 RPM Spin rate of the motor (RPM) = frame rate (Hz) × 60
Date & Time	6	Whole second part of the Coordinated Universal Time (UTC) of this data packet Each byte — Range (decimal) Year (current year minus 1900) — ⩾70 Month — 1 to 12 Day — 1 to 31 Hour — 0 to 23 Minute — 0 to 59 Second — 0 to 59

Field	Byte(s)	Description
UTC Fractional Seconds	4	The microsecond part of the Coordinated Universal Time (UTC) of this data packet. Unit: µs Range: 0 to 999 999 µs (1 s)
Factory Information	1	Fixed: 0x42
UDP Sequence	4	Sequence number of this data packet Range: 0 to 0xFF FF FF FF
IMU Temperature	2	Temperature provided by the inertial measurement unit (IMU), as a signed integer. Unit: 0.01°C
IMU Acceleration Unit	2	Conversion factor of acceleration, as an unsigned integer Current value: 0x7A (122) Unit of acceleration: 0.001m*g* × 122 = 0.122m*g* (*g*: standard gravity)
IMU Angular Velocity Unit	2	Conversion factor of angular velocity, as an unsigned integer Current value: 0xBE9 (3049) Unit of angular velocity: 0.01 mdps × 3049 = 30.49 mdps (millidegree per second)
Reserved	4	-

<table>
<tr><th>Field</th><th>Byte(s)</th><th>Description</th></tr>
<tr><td>IMU X Axis Acceleration</td><td>2</td><td>Acceleration of the X-axis, measured by the IMU
<table>
<tr><td>Data type</td><td>Signed integer</td></tr>
<tr><td>Measurement range</td><td>• $\pm 2g$
• $\pm 4g$ (default)
• $\pm 8g$
• $\pm 16g$
Use the PTC command (command code: 0xFF, 0x0000012E) to set the measurement range; see TCP API reference manual.</td></tr>
<tr><td>Unit of acceleration</td><td>See the <code>IMU Acceleration Unit</code> field; currently 0.122mg.</td></tr>
<tr><td>Example</td><td>When this field is 5, X-axis acceleration = 5 × 0.122mg = 0.61mg.</td></tr>
</table></td></tr>
<tr><td>IMU Y Axis Acceleration</td><td>2</td><td>Acceleration of the Y-axis</td></tr>
<tr><td>IMU Z Axis Acceleration</td><td>2</td><td>Acceleration of the Z-axis</td></tr>
</table>

Field	Byte(s)	Description
IMU X Axis Angular Velocity	2	Angular velocity of the X-axis, measured by the IMU Data type: Signed integer Measurement range: Unit: dps • ±125 • ±1000 (default) • ±2000 Use the PTC command (command code: 0xFF, 0x0000012E) to set the measurement range; see TCP API reference manual. Unit of angular velocity: See the `IMU Angular Velocity Unit` field; currently 30.49 mdps. Example: When this field is 5, X-axis angular velocity = 5 × 30.49 mdps = 152.45 mdps.
IMU Y Axis Angular Velocity	2	Angular velocity of the Y-axis
IMU Z Axis Angular Velocity	2	Angular velocity of the Z-axis
CRC	4	CRC-32/MPEG-2 checksum of the Tail

3.1.3 Ethernet tail

Field	Byte(s)	Description
FCS	4	Frame check sequence

3.1.4 Point cloud data analysis method

Take **Channel 6** in **Block 1** as an example.

Analyze the vertical angle of a data point

The designed vertical angle of **Channel 6** is 0.13°, according to Appendix A Channel distribution data.

- The accurate vertical angles are recorded in the angle correction file of this lidar; see Angle correction file.
- 0° is the horizontal direction. The upward direction is defined as positive; see Figure 4. Channel vertical distribution.

Analyze the horizontal angle of a data point

Y-axis is the 0° position. The clockwise direction (in the top view) is defined as positive; see Figure 3. Lidar azimuthal position (top view).

Horizontal angle = ① + ②

① Angular position at the start time (see Section B.3 Start time of each block) of the current block

② Firing time angular offset of the current firing channel

① = ③ + ④

③ Current reference azimuth of this block

Can be read from the `Azimuth 1` field. See Section 3.1.2.3 Body.

④ Horizontal angle offset of the current firing channel

The offset of **Channel 6** is -9.72°, according to Appendix A Channel distribution data.

The accurate horizontal angle offsets are recorded in this lidar unit's angle correction file; see Angle correction file.

② = ⑤ × ⑥

⑤ Firing time offset of the current firing channel
See Section B.4 Laser firing time of each channel.

⑥ Spin rate of the motor
See the `Motor Speed` field in Section 3.1.2.4 Tail. The unit should be converted to °/s.

Integration note for accuracy-critical applications

The lidar follows an **interleaved, unevenly spaced** firing sequence:

- The channel index does NOT represent the firing time order.
- The firing time intervals between channels are NOT uniform.

In accuracy-critical applications, the firing time offsets in Section B.4 SHALL be applied for motion compensation (i.e., deskewing).

False assumptions (such as a linear firing sequence or uniform time spacing) can lead to erroneous point timestamps and degraded motion compensation, especially during high-speed motion. As a result, gaps or ghosting artifacts may appear on vertical structures (e.g., walls and pipes) in the point cloud.

An application may be considered accuracy-critical if it meets one or more of these conditions:

- Used in surveying and mapping
- Deployed on a mobile platform, such as a vehicle, drone, or robot
- Implements motion compensation algorithms or SLAM/mapping stacks

Analyze the distance of a data point

See the `Distance` field of **Block 1: Channel 6** in Section 3.1.2.3 Body.

Draw the data point in a spherical or rectangular coordinate system

In a spherical coordinate system, the vertical and horizontal angles are defined in the figure below.

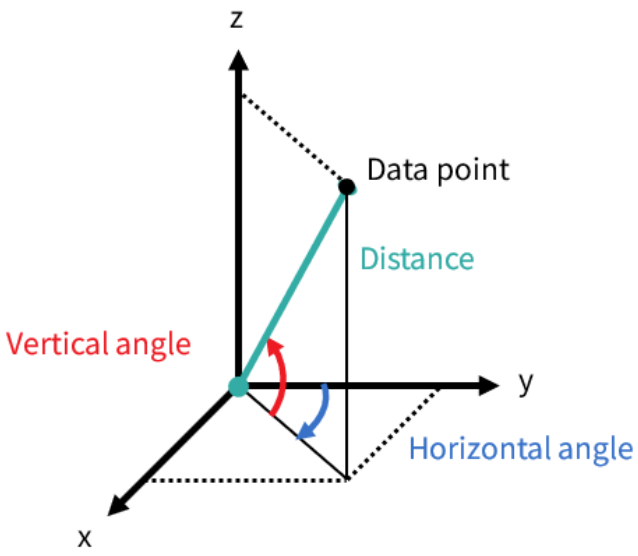

Obtain the real-time point cloud data by analyzing and drawing every data point in each frame.

3.2 GNSS Data Packet

- Please configure network parameters on the host computer before receiving GNSS Data Packet. See Section 2.4 Network settings on the host computer.
- When GNSS is selected as the clock source, a GNSS Data Packet is triggered every second; When PTP is selected as the clock source, the lidar does not output GNSS Data Packet.

To select the clock source, refer to Section 4.4 Time sync.

Unless otherwise specified, all the multi-byte fields are unsigned and transmitted in little-endian format.

3.2.1 Ethernet Header

Transmitted in big-endian format.

GNSS Data packet: Ethernet Header

Field	Byte(s)	Description
Ethernet II MAC	12	Destination MAC: xx:xx:xx:xx:xx:xx (FF:FF:FF:FF:FF:FF for broadcast) Source MAC: xx:xx:xx:xx:xx:xx
Ethernet Data Packet Type	2	0x08, 0x00
Internet Protocol	20	Protocol parameters
UDP Port Number	4	Source port (default: 10000) Destination port (default: 10110)
UDP Length	2	8 bytes more than GNSS UDP data; see Figure 13. Data structure
UDP Checksum	2	Checksum of the Ethernet Header

3.2.2 GNSS UDP data

Field	Byte(s)	Description
GNSS Time Data	18	GNSS time, accurate to the second Field | Byte(s) | Description GNSS Header | 2 | 0xFFEE (0xFF first) Date | 6 | Year, month, and day in ASCII (2 bytes each, lower byte first) Time | 6 | Second, minute, and hour in ASCII (2 bytes each, lower byte first) Reserved | 4 | -
NMEA Data	84	NMEA sentence containing date and time ASCII code; valid till 2 bytes after the asterisk (*). Users can select the NMEA sentence to be received (see **GNSS Mode** in Section 4.4 Time sync).
Reserved	404	404 bytes of 0xDF
GNSS Positioning Status	1	ASCII code, obtained from the NMEA sentence
PPS Lock Flag	1	1 — Locked 0 — Unlocked
Reserved	4	-

GPRMC data format

```
$GPRMC, <01>, <02>, <03>, <04>, <05>, <06>, <07>, <08>, <09>, <10>, <11>, <12>*hh
```

Field No.	Field	Description
<01>	UTC Time	Hour, minute, and second Typically in hhmmss (hour, minute, second) format
<02>	Location Status	A (hex = 41) — Active (valid position) V (hex = 56) — Void (invalid position) NUL (hex = 0) — GPS unlocked
…	…	…
<09>	UTC Date	Date information Typically in ddmmyy (day, month, year) format
…	…	…

The lidar's GPS data interface accepts a variety of GPRMC formats, as long as:

Field <01> (after the first comma separator) is the hour, minute, and second information.
Field <09> (after the ninth comma separator) is the date information.

For example, the following formats are both acceptable:

```
$GPRMC,072242,A,3027.3680,N,11423.6975,E,000.0,316.7,160617,004.1,W*67
$GPRMC,065829.00,A,3121.86377,N,12114.68322,E,0.027,,#160617#,,,A*74
```

GPGGA data format

```
$GPGGA, <01>, <02>, <03>, <04>, <05>, <06>, <07>, <08>, <09>, <10>, <11>, <12>*hh
```

Field No.	Field	Description
<01>	UTC Time	Hour, minute, and second Typically in hhmmss (hour, minute, second) format
…	…	…
<06>	GPS Fix Quality	Range: 0 to 9 Refer to the description given by the GPS device provider. Common definitions: 0 Invalid 4 RTK fix 1 GPS fix (SPS) 5 RTK float 2 DGPS fix 6 Estimated (dead reckoning) 3 PPS fix - -
…	…	…

The lidar's GPS data interface accepts a variety of GPGGA formats, as long as:

Field <01> (after the first comma separator) is the hour, minute, and second information.

For example, the following formats are both acceptable:

```
$GPGGA,123519,4807.038,N,01131.000,E,1,08,0.9,545.4,M,46.9,M,,*47
$GPGGA,134658.00,5106.9792,N,11402.3003,W,2,09,1.0,1048.47,M,-6.27,M,08,AAAA*60
```

3.2.3 Ethernet tail

Field	Byte(s)	Description
FCS	4	Frame check sequence

3.2.4 GNSS time data analysis method

```
> Data (512 bytes)
0000  04 d4 c4 eb 9b 37 ec 9f  0d 00 48 cb 08 00 45 00   ·····7·· ··H···E·
0010  02 1c c4 23 40 00 80 11  b0 66 c0 a8 01 c9 c0 a8   ···#@··· ·f******
0020  01 2d 27 10 27 7e 02 08  00 00 ff ee 30 32 34 30   ·-'·'~·· ····0240
0030  37 30 38 35 37 30 34 30  00 00 00 00 24 47 50 52   70857040 ····$GPR
0040  4d 43 00 2c 30 34 30 37  35 37 2e 37 36 2c 56 2c   MC·,0407 57.76,V,
0050  2c 2c 2c 2c 2c 2c 30 37  30 34 32 30 2c 2c 2c 4e   ,,,,,,07 0420,,,N
0060  2c 56 2a 30 36 36 36 36  36 36 36 36 36 36 36 36   ,V*06666 66666666
```

Figure 14. GNSS Data packet: GNSS time data (example)

Date

Field	Data (in ASCII)	Characters	Meaning
Year	0x30 0x32	'0', '2'	20
Month	0x34 0x30	'4', '0'	04
Day	0x37 0x30	'7', '0'	07

Time

Field	Data (in ASCII)	Characters	Meaning
Second	0x38 0x35	'8', '5'	58
Minute	0x37 0x30	'7', '0'	07
Hour	0x34 0x30	'4', '0'	04

4 Parameter interfaces

All the parameters in this section can be accessed using API; some of the parameters are also shown in LidarUtilities.

Users cannot read or write the parameters in this section.

4.1 Network connection

4.1.1 Source

Source IPv4 Address

Option(s)	Description
Default: 192.168.1.201	UDP
Default: 192.168.1.201	PTC API

Source IPv4 Subnet Mask

Option(s)	Description
Default: 255.255.255.0	Applies to both UDP and PTC ports.

Source IPv4 Gateway

Option(s)	Description
Default: 192.168.1.1	Applies to both UDP and PTC ports.

4.1.2 Destination

Destination IPv4 Address

Option(s)	Description
255.255.255.255	Destination address for Point Cloud Data Packets

Destination Point Cloud UDP Port

Option(s)	Description
Default: 2368	Destination port for Point Cloud Data Packets

Destination Fault Message Port

Option(s)	Description
Default: 2369	Destination port for Fault Message Packets

4.2 Functional settings

Azimuth FOV

Options	Description
Single-Section FOV (default) Multi-Section FOV	Configuration mode of the azimuth FOV The lidar outputs valid data only within the specified azimuth FOV ranges. • In Single-Section FOV mode, one continuous angle range [Start Angle, End Angle] is specified for all channels. • In Multi-Section FOV mode, multiple (1 to 5) continuous angle ranges are specified for all channels. • The angles in degrees are accurate to the first decimal place. • The Start Angle and the End Angle must be different. • When the Start Angle is larger than the End Angle: ◦ The Start Angle must not be 360°. ◦ The End Angle must not be 0°. ◦ The actual range is the union of [Start Angle, 360°) and [0°, End Angle). For instance, when the angle range is set to be [270°, 90°), the actual azimuth FOV is [270°, 360°) ∪ [0°, 90°).

Return Mode

Option(s)	Description
Single Return: • Strongest • Last • First Dual Return: • Last and Strongest (default) • Last and First • First and Strongest	The current return mode is shown in Point Cloud Data Packets; see the `Return Mode` field in Section 3.1.2.4 Tail.

Spin Rate

Option(s)	Description
600 RPM (default) 1200 RPM	Spin rate of the motor The current spin rate is shown in Point Cloud Data Packets; see the `Motor Speed` field in Section 3.1.2.4 Tail.

Sync Angle

Option(s)	Description
[0°, 360°)	Sync angle At every full second, the lidar will rotate to that azimuthal position. Lidar azimuthal position is defined in Section 1.3 Basic structure. Definition of the full second (detailed in Section B.1 Source of absolute time): • When GNSS is locked, the full second is defined as the rising edge of the GNSS PPS signal. • When PTP is tracking or locked, the full second is retrieved from the PTP signal. (PPS signal is not required nor used.) • When PTP is frozen or in free run, the full second is defined as the rising edge of the lidar's internal 1 Hz signal. To phase-lock multiple lidar units, connect them to the same clock source and set the same sync angle. These lidar units will rotate to the same azimuthal position at every full second.

Trigger Method

Option(s)	Description
Angle-Based (default) Time-Based	The way laser firings are triggered Angle-Based: Lasers fire every 0.4° at 10 Hz. Lasers fire every 0.8° at 20 Hz. Time-Based: Lasers fire every 111.111 µs.

4.3 State settings

Reset All Settings

Option(s)	Description
Reset All Settings	Reset all the parameters in Section 4.2 Functional settings to factory defaults.

Restart

Option(s)	Description
N/A	Afterward, the Start-Up Times in Section 4.6 Operation Statistics increments by 1.

Standby Mode

Option(s)	Description
In Operation (default) Standby	In Standby mode, the motor stops running and lasers stop firing.

4.4 Time sync

Read-only parameter	Description	
PTP Status	Free Run	No PTP master is selected.
	Tracking	Attempting to sync with the selected PTP master, but the absolute offset exceeds the user-specified limit; see PTP Lock Time Offset in this section.
	Locked	The absolute offset is within the user-specified limit.
	Frozen	The lidar has lost connection to the PTP master and is attempting to recover it. Meanwhile, lidar time will drift from the last synchronized time.

Clock Source

Option(s)	Description
GNSS PTP (default)	External source of absolute time

PTP Profile

Option(s)	Description
1588v2 (default) 802.1AS 802.1AS Automotive	IEEE timing and synchronization standard

PTP Lock Time Offset

Option(s)	Description
1 to 1000 µs (integer) Default: 100	Upper limit of the absolute offset between Slave and Master when the lidar is in PTP Locked status; see PTP Status.

PTP Domain Number

Option(s)	Description
0 to 127 (integer) Default: 0	Domain attribute of the local clock

PTP Network Transport

Option(s)	Description
L2 UDP/IP (default)	Network transport protocol

4.5 Lidar info

Read-only parameter	Description
SN	Serial Number
PN	Part Number, indicating the lidar's hardware version
MAC address	Media access control (MAC) address Format: XX:XX:XX:XX:XX:XX (hexadecimal)

Angle correction file

Option(s)	Description
Get File	The angle correction file of each lidar unit is used to correct the azimuth and elevation of each channel.

4.6 Operation Statistics

Availability

- Start-Up Times
- System Uptime
- Total Operation Time

4.7 Upgrade

Upgrade

Option(s)	Description
Upgrade	Upgrade the lidar's firmware and software.

5 Maintenance

The lidar's cover lens is made of plastic (polycarbonate, PC).

- Do NOT wipe the cover lens when it is dry, nor use abrasive cleaners. Doing so can damage the optical coating.
- Do NOT use organic cleaners, which can damage the cover lens and even cause cracking.
  - Organic cleaners include but are not limited to tar removers, self-cleaning agents, adhesive removers, coating removers, foam cleaners, iron powder removers for car paint, glass cleaners, thinning agents, de-icers, paint surface treatment agents, alcohol, and vinegar.
  - If organic cleaners may be present when cleaning the equipment or performing related operations, please protect the cover lens to prevent any contact with organic cleaners.
- Do NOT apply excessive force to the lidar, as this can damage the cover lens.
  - Using automatic cleaning devices that are not specifically designed for lidars may pose risks. Please contact Hesai technical support for assessment.
  - Do NOT use sharp objects (such as knives or metal tweezers) or hard brushes (such as stiff nylon brushes or wire brushes) to scratch the cover lens cover surface. Such actions may damage the cover lens surface, and in severe cases, may cause malfunction.
- After prolonged exposure to strong sunlight and high temperatures, the cover lens should NOT be cleaned immediately.
- If snow or ice accumulates on the cover lens, do NOT use a pressure washer or ice scraper.
  - A small broom is recommended to remove snow.
  - A solvent-free (i.e., free of organic solvents) ice removal spray is recommended to remove ice; alternatively, wait for the ice to melt by itself.
- Do NOT wax the cover lens.

Please regularly check on the cover lens, considering your use frequency, storage environment, and climate conditions.

- If foreign objects (such as dust, fingerprints, or oil stains) are found on the cover lens, make sure to clean them.
- If corrosive foreign objects (such as insect remains, bird droppings, tree resin, road dust, industrial dust, asphalt, soot particles, and road salt) are found on the cover lens, make sure to clean them immediately.

Cleaning procedure

1. Make sure the lidar is powered OFF.
2. Choose an appropriate cleaning agent:
   - For light stains, use room temperature water.
   - For heavier stains, use a mild soap solution (no more than two tablespoons of soap per quart or liter of water).
   - For stubborn stains, use a solvent-free (i.e., free of organic solvents), pH-neutral detergent at room temperature, such as car shampoo.
3. Take a clean soft sponge or anti-static microfiber cloth, dampen it with the chosen cleaning agent, and gently wipe the dirty area on the cover lens back and forth.
4. For stubborn stains, cover the dirty area with the dampened sponge or cloth to soften the stains before wiping.
5. Immediately after removing the stains, rinse the cover lens with clean water. Then, use a clean soft sponge or microfiber cloth to gently wipe away any remaining liquid (which may contain residual cleaning agents or contaminants).

6 Troubleshooting

If the following procedures cannot solve your problem, please contact Hesai technical support.

Symptoms	Points to check
Motor is not running.	Make sure that the following conditions are met: • The power adapter is properly connected and in good condition. • The input voltage and input current satisfy the requirements in Section 1.5 Specifications. • The lidar can be accessed using LidarUtilities (see Cannot connect to lu). • The lidar is not in standby mode; this can be confirmed using LidarUtilities or PTC commands. Afterward, power on the lidar again and check if the symptom persists.
Motor is running, but no output data is received, neither by Wireshark nor by PandarView 2.	Make sure that the following conditions are met: • The Ethernet cable is properly connected (by unplugging and plugging again). • Destination IP is correctly set; this can be confirmed using LidarUtilities or PTC commands. • Firmware version is correct; this can be confirmed using LidarUtilities or PTC commands. • The lidar is emitting laser light; this can be confirmed using an infrared camera, an infrared sensor card, or a phone camera without an IR-cut filter. Afterward, power on the lidar again and check if the symptom persists.
Output data can be received by Wireshark but not by PandarView 2.	Make sure that the following conditions are met: • Lidar Destination Port is correctly set; this can be confirmed using LidarUtilities or PTC commands. • If VLAN is enabled, the computer's VLAN ID should be the same as the lidar's; this can be checked using LidarUtilities or PTC commands. • The computer's firewall for public networks is turned off, or PandarView 2 is added to firewall exceptions. • The latest PandarView 2 is installed (see Downloads page of Hesai's official website or contact Hesai technical support). Afterward, power on the lidar again and check if the symptom persists.

Symptoms	Points to check
The lidar cannot connect to LidarUtilities.	Make sure that the following conditions are met: • Ethernet cable is properly connected (by unplugging and plugging again). • The lidar's IP is in the same subnet with the computer's (WireShark may be used to check the lidar's IP that broadcasts data packets). • If VLAN is enabled, the computer's VLAN ID should be the same as the lidar's; this can be checked using LidarUtilities or PTC commands. Afterward, follow these steps: 1. Restart the computer or connect the lidar to another computer. 2. Power on the lidar again and check if the symptom persists.
Point cloud is abnormal, showing obviously misaligned points, flashing points, or incomplete FOV.	Make sure that the following conditions are met: • The lidar's cover lens is clean. If not, refer to Section 5 Maintenance for the cleaning method. • The lidar's angle correction file is applied (refer to PandarView 2 User Manual). • Spin Rate is steady; this can be confirmed either by checking the `Motor Speed` field (if available) in Point Cloud Data Packets, or by using LidarUtilities, PandarView 2 or PTC commands. • The lidar's internal temperature is between -20°C and 95°C; this can be confirmed using LidarUtilities, PandarView 2 or PTC commands. Afterward, check for packet loss. If no packet is lost yet the point cloud flashes, try these steps: 1. Update PandarView 2 to the latest version (see Downloads page of Hesai's official website or contact Hesai technical support). 2. Restart the computer. If the point cloud is still abnormal, try these steps: 1. Connect the lidar to another computer and another network. 2. Power on again and check if the symptom persists.

Symptoms	Points to check
The number of data packets received is abnormal, indicating missing packets.	Make sure that the following conditions are met: • Spin Rate is steady; this can be confirmed either by checking the `Motor Speed` field (if available) in Point Cloud Data Packets, or by using LidarUtilities, PandarView 2 or PTC commands. • The lidar's internal temperature is between -20°C and 95°C; this can be confirmed using LidarUtilities, PandarView 2 or PTC commands. • Ethernet is not overloaded. • No switch is connected to the network (the data transmitted from other devices may cause network congestion and packet loss). Afterward, follow these steps: 1. Connect the computer to no other devices but the lidar and check for packet loss. 2. Power on the lidar again and check if the symptom persists.
GNSS cannot be locked.	Make sure that the following conditions are met: • GNSS receiver is properly connected. • PPS signal is connected to the lidar. • GNSS Destination Port is correctly set; this can be confirmed using LidarUtilities or PTC commands. • The GNSS signals satisfy the electrical requirements in Section 2.2 Electrical interface. Afterward, power on the lidar again and check if the symptom persists.

Appendix A: Channel distribution data

A.1 Angular position and performance

Notes to the table

Angular position Design values of each channel's horizontal (azimuth) angle offset and vertical (elevation) angle.

- The accurate values are recorded in this lidar unit's angle correction file.
- To analyze point cloud data, refer to Section 3.1.4 Point cloud data analysis method.

Vertical angles Angles in space.
For the projected angles onto the plane, see Figure 4.

To improve measurement performance, only a subset of channels are enabled in the near field.

- When distance < 0.35 m, **63** channels are enabled.
  - The 60 odd-numbered channels within Channels 1 to 120
  - Channels 125, 127, and 128
- When 0.35 m ⩽ distance < 0.5 m, **68** channels are enabled.
  - The 60 odd-numbered channels within Channels 1 to 120
  - Channels 121 to 128

Channel No.	Angular position (°)		Instrumented range (m)	
	Horiz. offset	Vertical	Min	Max
1	-1.08	-4.43	0.5	60
2	-9.71	-3.50	0	60
3	-1.09	-2.55	0.5	60
4	-9.71	-1.65	0	60

Channel No.	Angular position (°)		Instrumented range (m)	
	Horiz. offset	Vertical	Min	Max
5	-1.10	-0.75	0.5	60
6	-9.72	0.13	0	60
7	-1.12	0.99	0.5	60
8	-9.73	1.85	0	60
9	2.69	2.64	0.5	60
10	11.33	3.46	0	60
11	2.68	4.29	0.5	60
12	11.34	5.09	0	60
13	2.68	5.91	0.5	60
14	11.36	6.69	0	60
15	2.68	7.49	0.5	60
16	11.39	8.25	0	60
17	-1.19	9.08	0.5	60
18	-9.92	9.84	0	60
19	-1.21	10.59	0.5	60
20	-9.98	11.34	0	60
21	-1.22	12.08	0.5	60
22	-10.04	12.81	0	60
23	-1.24	13.54	0.5	60
24	-10.11	14.26	0	60

Channel No.	Angular position (°)		Instrumented range (m)	
	Horiz. offset	Vertical	Min	Max
25	2.50	15.11	0.5	60
26	11.47	15.83	0	60
27	2.51	16.53	0.5	60
28	11.56	17.23	0	60
29	2.52	17.93	0.5	60
30	11.65	18.62	0	60
31	2.54	19.31	0.5	60
32	11.75	19.99	0	60
33	-1.33	20.71	0.5	60
34	-10.60	21.38	0	60
35	-1.35	22.07	0.5	60
36	-10.71	22.73	0	60
37	-1.37	23.42	0.5	60
38	-10.84	24.07	0	60
39	-1.39	24.76	0.5	60
40	-10.97	25.40	0	60
41	2.64	26.06	0.5	60
42	12.39	26.73	0	60
43	2.67	27.39	0.5	60
44	12.55	28.05	0	60

Channel No.	Angular position (°)		Instrumented range (m)	
	Horiz. offset	Vertical	Min	Max
45	2.70	28.71	0.5	60
46	12.71	29.35	0	60
47	2.73	30.02	0.5	60
48	12.89	30.66	0	60
49	-1.51	31.37	0.5	60
50	-11.77	32.05	0	60
51	-1.54	32.68	0.5	60
52	-11.96	33.34	0	60
53	-1.57	33.99	0.5	60
54	-12.15	34.63	0	60
55	-1.60	35.29	0.5	60
56	-12.36	35.92	0	60
57	2.94	36.56	0.5	60
58	13.96	37.23	0	60
59	2.98	37.86	0.5	60
60	14.21	38.51	0	60
61	3.04	39.15	0.5	60
62	14.48	39.79	0	60
63	3.09	40.45	0.5	60
64	14.76	41.07	0	60

Channel No.	Angular position (°)		Instrumented range (m)	
	Horiz. offset	Vertical	Min	Max
65	-1.77	41.78	0.5	60
66	-13.62	42.47	0	60
67	-1.80	43.08	0.5	60
68	-13.91	43.75	0	60
69	-1.85	44.37	0.5	60
70	-14.22	45.02	0	60
71	-1.89	45.67	0.5	60
72	-14.55	46.29	0	60
73	3.44	46.93	0.5	60
74	16.55	47.65	0	60
75	3.53	48.23	0.5	60
76	16.98	48.91	0	60
77	3.62	49.53	0.5	60
78	17.43	50.18	0	60
79	3.72	50.82	0.5	60
80	17.92	51.44	0	60
81	-2.14	52.17	0.5	60
82	-16.65	52.84	0	60
83	-2.20	53.47	0.5	60
84	-17.16	54.11	0	60

Channel No.	Angular position (°)		Instrumented range (m)	
	Horiz. offset	Vertical	Min	Max
85	-2.26	54.78	0.5	60
86	-17.70	55.38	0	60
87	-2.33	56.09	0.5	60
88	-18.30	56.66	0	60
89	4.37	57.36	0.5	60
90	21.24	58.11	0	60
91	4.54	58.68	0.5	60
92	22.06	59.37	0	60
93	4.73	60.00	0.5	60
94	22.96	60.64	0	60
95	4.93	61.33	0.5	60
96	23.96	61.90	0	60
97	-2.77	62.71	0.5	60
98	-22.52	63.44	0	60
99	-2.88	64.06	0.5	60
100	-23.61	64.72	0	60
101	-3.01	65.41	0.5	60
102	-24.83	66.00	0	60
103	-3.15	66.78	0.5	60
104	-26.20	67.29	0	60

Channel No.	Angular position (°)		Instrumented range (m)	
	Horiz. offset	Vertical	Min	Max
105	6.43	68.10	0.5	60
106	32.52	69.12	0	60
107	6.87	69.49	0.5	60
108	34.78	70.36	0	60
109	7.39	70.89	0.5	60
110	37.40	71.58	0	60
111	8.01	72.32	0.5	60
112	40.46	72.77	0	60
113	-4.25	73.88	0.5	60
114	-41.40	75.22	0	60
115	-4.60	75.36	0.5	60
116	-45.72	76.40	0	60
117	-5.04	76.87	0.5	60
118	-50.95	77.51	0	60
119	-5.61	78.41	0.5	60
120	-57.28	78.51	0	60
121	26.63	79.62	0.35	60
122	31.42	81.04	0.35	60
123	38.15	82.40	0.35	60
124	47.90	83.64	0.35	60

Channel No.	Angular position (°)		Instrumented range (m)	
	Horiz. offset	Vertical	Min	Max
125	-6.32	85.36	0	60
126	-0.86	87.02	0.35	60
127	18.19	88.64	0	60
128	117.30	88.99	0	60

A.2 Angle correction file

Purpose

Each lidar unit has an angle correction file, which contains the horizontal angle offsets (azimuth offsets) and vertical angles (elevation). Such corrections are used for:

- Point cloud data analysis (see Section 3.1.4 Point cloud data analysis method)
- Point cloud display in PandarView 2

How to obtain this file

Use one of these ways:

- Send PTC command 0x05; see the TCP API Reference Manual.
- Export the file using PandarView 2; see the PandarView 2 User Manual.
- Ask Hesai technical support or your sales representative.

Data format

The CSV file is as follows.

- The angles are in units of degrees.
- The last line is the SHA-256 checksum.

```
EEFF,1,1
Channel,Elevation,Azimuth
1,xxx,xxx
2,xxx,xxx
...
127,xxx,xxx
128,xxx,xxx
xxxxxxxxxxxxxxxxxxxxxxxxxxxxxxxxxxxxxxxxxxxxxxxxxxxxxxxxxxxxxxxx
```

Description of Row 1

Field	Description
Beginning of File	Fixed: 0xEE FF
Protocol Version Major	Current value: 0x01
Protocol Version Minor	Current value: 0x01

Appendix B: Absolute time of point cloud data

B.1 Source of absolute time

The lidar retrieves the current absolute time by connecting to an external clock source.

B.1.1 GNSS as the clock source

The lidar connects to a third-party GNSS module to obtain pulse-per-second (PPS) signals and NMEA sentences.

- The timing requirements of PPS and NMEA are shown in Section 2.2.1 Pin description.

The absolute time is updated as follows:

NMEA status	Date and time (accurate to the second)	Lidar behavior
Unlocked (Initial)	Virtual	Because the lidar has not been locked before, it starts counting from **a virtual UTC** (such as 2000–01–01 00:00:00) using the lidar's internal 1 Hz signal.
Locked	Synchronized	At each rising edge of the internal 1 Hz signal, the lidar obtains the actual date and time by performing these two steps: 1. Extract the date and time from the previous NMEA message. 2. Add 1 full second.
Unlocked (Lost)	Drifting	When the lidar goes from Locked to Unlocked, it starts counting from **the last synchronized time** using the lidar's internal 1 Hz signal. This absolute time will gradually drift from the actual GNSS time.

PPS status	µs time	Lidar behavior
Unlocked (Initial)	Not synchronized	The lidar's internal 1 Hz signal is not aligned with the GNSS second.

PPS status	µs time	Lidar behavior
Locked	Synchronized	The rising edge of the lidar's internal 1 Hz signal is aligned with the rising edge of the PPS signal (i.e. the start of each GNSS second).
Unlocked (Lost)	Drifting	The lidar counts the absolute time using the internal 1 Hz signal. This absolute time will gradually drift from the actual GNSS second.

B.1.2 PTP as the clock source

The lidar connects to a third-party PTP master to obtain PTP signal.

- PPS signal is not required nor used.
- PTP can be configured using LidarUtilities or PTC commands.
- The status of PTP signal can be found using LidarUtilities or PTC commands.
- The lidar does not output GNSS Data Packets.

The absolute time is updated as follows:

PTP status	Date and time (accurate to the microsecond)	Lidar behavior
Free run	Virtual	Because the lidar has not been locked before, it starts counting from **a virtual UTC** (such as 2000–01–01 00:00:00) using the lidar's internal 1 Hz signal.
Tracking or Locked	Synchronized	The lidar extracts the actual date and time from the PTP master's messages.
Frozen	Drifting	When the lidar goes from Tracking/Locked to Frozen, it starts counting from **the last synchronized time** using the lidar's internal 1 Hz signal. This absolute time will gradually drift from the actual PTP time.

- PTP is a Plug & Play protocol; the lidar works as a PTP slave device and requires no additional setup.
- The `UTC Fractional Seconds` and `Date & Time` fields in Point Cloud Data Packets strictly follow the PTP master device. Certain PTP

master devices may have a specified offset from the lidar's time output. Please verify the configuration and calibration of your PTP master device.

B.2 Absolute time of the Point Cloud Data Packets

The absolute time of a Point Cloud Data Packet is $t_0 = t_s + t_{frac}$, where:

- t_s is the whole second part (see the `Date & Time` field).
- t_{frac} is the microsecond or nanosecond part (see the `UTC Fractional Seconds` field).

The definition of the above fields is in Section 3.1.2.4 Tail.

B.3 Start time of each block

Given the absolute time of this Point Cloud Data Packet as t_0, the start time of each block t(m) can be calculated.

At each t(m), the lidar saves the current azimuth into the current block's Azimuth field in the Point Cloud Data Packet; see Section 3.1.2.3 Body.

(Unit: µs)

Single Return mode

Block	Start time t(m)
Block 1	t_0 - 111.111 - 1888
Block 2	t_0 - 1888

Dual return mode

Block	Start time t(m)
Block 1 & Block 2	t_0 - 1888

B.4 Laser firing time of each channel

In Block m, the absolute firing time of Channel n is:

$$t(m, n) = t(m) + \Delta t(n)$$

Look up the firing time offsets Δt(n) in the table below:

Firing time offsets (unit: μs)

Channel	Firing time offset	Channel	Firing time offset	Channel	Firing time offset	Channel	Firing time offset
1	95.18	2	23.24	3	98.22	4	20.2
5	101.26	6	17.16	7	104.3	8	14.12
9	77.28	10	92.14	11	74.24	12	89.1
13	71.2	14	86.06	15	68.16	16	83.02
17	50.26	18	11.08	19	47.22	20	8.04
21	44.18	22	5	23	41.14	24	1.96
25	65.12	26	105.82	27	62.08	28	102.78
29	59.04	30	99.74	31	56	32	96.7
33	38.1	34	24.76	35	35.06	36	21.72
37	32.02	38	18.68	39	28.98	40	15.64
41	78.8	42	93.66	43	75.76	44	90.62
45	72.72	46	87.58	47	69.68	48	84.54
49	51.78	50	12.6	51	48.74	52	9.56
53	45.7	54	6.52	55	42.66	56	3.48

Channel	Firing time offset	Channel	Firing time offset	Channel	Firing time offset	Channel	Firing time offset
57	66.64	58	103.54	59	63.6	60	100.5
61	60.56	62	97.46	63	57.52	64	94.42
65	39.62	66	22.48	67	36.58	68	19.44
69	33.54	70	16.4	71	30.5	72	13.36
73	76.52	74	91.38	75	73.48	76	88.34
77	70.44	78	85.3	79	67.4	80	82.26
81	49.5	82	10.32	83	46.46	84	7.28
85	43.42	86	4.24	87	40.38	88	1.2
89	64.36	90	105.06	91	61.32	92	102.02
93	58.28	94	98.98	95	55.24	96	95.94
97	37.34	98	24	99	34.3	100	20.96
101	31.26	102	17.92	103	28.22	104	14.88
105	78.04	106	92.9	107	75	108	89.86
109	71.96	110	86.82	111	68.92	112	83.78
113	51.02	114	11.84	115	47.98	116	8.8
117	44.94	118	5.76	119	41.9	120	2.72
121	65.88	122	62.84	123	59.8	124	56.76
125	38.86	126	35.82	127	32.78	128	29.74

Appendix C: Power supply requirements

C.1 Input voltage

To ensure that the input voltage U_{in} at the lidar's connector (see Section 2.2 Electrical interface) is between 9 to 32 V DC, check these specifications:

- U_s: Voltage of the power source
- U_{drop}: Voltage drop over the cable, from the power source to the lidar's connector

$$U_{\text{in}} = U_{\text{s}} - U_{\text{drop}}$$

C.1.1 Estimate the cable voltage drop

Use either the estimation formula or the lookup table.

Estimation formula

When the lidar operates at 10 Hz under room temperature (23 ± 5°C), cable voltage drop can be estimated as:

$$U_{\text{drop}} = \frac{U_s - \sqrt{U_s^2 - 40r}}{2}$$

L	Cable length (unit: m)
r	Cable resistance (unit: Ω)
U_s	Source voltage (unit: V)

The wire gauge of the lidar's power wire should be ⩽26 AWG.
For 26 AWG wires, r = 0.3L.

Lookup table

Cable length L	Cable voltage drop		
	When U_s = 12 V	When U_s = 24 V	When U_s = 32 V
2 m	0.52 V	0.25 V	0.19 V
5 m	1.42 V	0.64 V	0.48 V
10 m	3.55 V (lidar's input voltage < 9 V)	1.32 V	0.97 V

As shown in the table above, when the cable length exceeds 10 m, the source voltage should be greater than 24 V.

C.1.2 Avoid overvoltage

When the lidar's input voltage approaches 32 V, make sure there is no additional overshoot in the external power system. Even a short period of overvoltage can cause irreversible damage to the lidar.

C.2 Input power

The lidar's peak power consumption is below 30 W in all operating conditions.
After a power-on in an ambient temperature below 0°C, power consumption typically remains around 15 W for a period of time.
When setting the frame rate to 20 Hz, power consumption will also be higher than the typical value in Section 1.5 Specifications.
In the above or similar conditions, we recommend providing at least 30 W of input power to the lidar.

C.3 Power up/down

During power-up

The voltage requirements are shown below.

- The lidar's input voltage should remain below 1 V for more than 50 ms before ramping up.
- During the ramp-up, the input voltage should climb to 90% of its designed value in less than 500 ms.

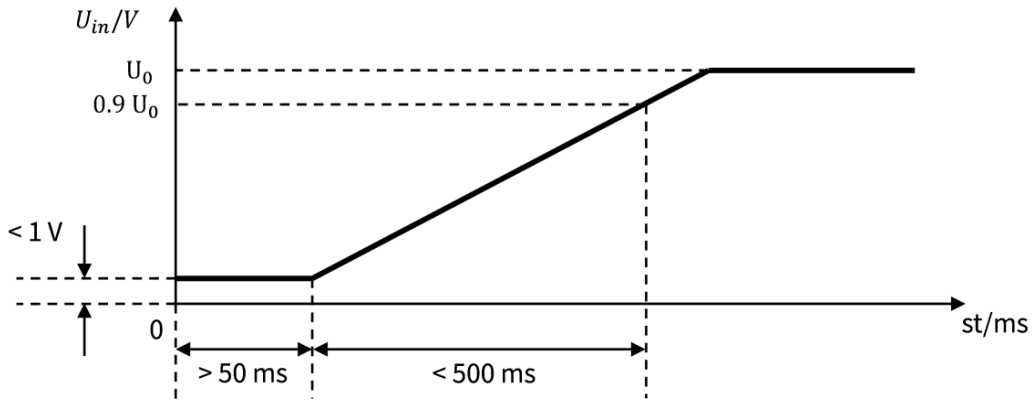

Figure 15. Voltage requirements during power-up

During power-down

Once the lidar's input voltage falls below 1 V, it must remain below 1 V for at least 50 ms before the next power-up.

Appendix D: Optical center offset correction

D.1 Cause for correction

The distance measurements and the elevation of each channel are relative to the optical center. See the definition and position of the optical center in Section 1.4 Channel distribution and coordinate systems.

As the lidar rotates, the optical center constantly changes its position, which increases the complexity of point cloud processing algorithms; by comparison, the origin of the lidar's coordinate system is a more suitable reference point.

D.2 Definition of correction

As shown in the figure below:

- O is the origin of the lidar's coordinate system.
- A is the optical center.
- B is a random data point.
- (x_{AO}, y_{AO}, z_{AO}) are the rectangular coordinates of the optical center, given in Section 1.4 Channel distribution and coordinate systems.
- d_{BA} is the distance from Point B to Point A.
- ε_{BA} and α_{BA} are the elevation and azimuth angles of Point B relative to Point A.

For Point B, converting the spherical coordinates from **(d_{BA}, ε_{BA}, α_{BA})** (relative to Point A) into **(d, ε, α)** (relative to point O) is defined as optical center offset correction.

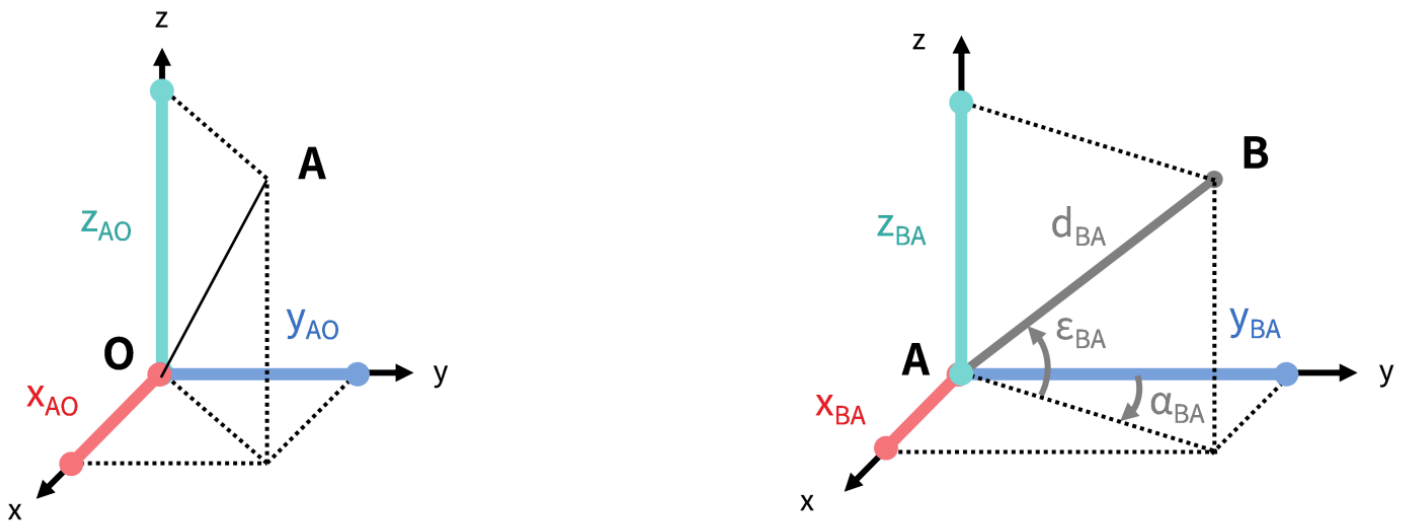

Figure 16. Illustration of optical center offset correction

D.3 Formula

The rectangular coordinates of Point B relative to Point O:

$$
\begin{aligned}
x &= x_{AO} + x_{BA} = x_{AO} + d_{BA} \cdot \cos(\varepsilon_{BA}) \cdot \sin(\alpha_{BA}) \\
y &= y_{AO} + y_{BA} = y_{AO} + d_{BA} \cdot \cos(\varepsilon_{BA}) \cdot \cos(\alpha_{BA}) \\
z &= z_{AO} + z_{BA} = z_{AO} + d_{BA} \cdot \sin(\varepsilon_{BA})
\end{aligned}
$$

Convert rectangular coordinates to spherical coordinates:

$$
\begin{aligned}
d &= \sqrt{x^2 + y^2 + z^2} \\
\varepsilon &= \arcsin(\tfrac{z}{d}) \\
\alpha &= \arctan(\tfrac{x}{y})
\end{aligned}
$$

Appendix E: Legal notice

Copyright © 2017-2026 Hesai Technology Co., Ltd.
All rights reserved. Use or reproduction of this manual in parts or its entirety in any form or by any means without the written authorization of Hesai is prohibited.

Hesai Technology makes no representations or warranties, either expressed or implied, with respect to the contents hereof and specifically disclaims any warranties, merchantability, or fitness for any particular purpose. Further, Hesai Technology reserves the right to revise this publication and to make changes from time to time in the contents hereof without obligation to notify any person of such revisions or changes.

HESAI and HESAI logo are registered trademarks of Hesai Technology. All other trademarks, service marks, and company names in this manual or on Hesai's official website are properties of their respective owners.

The software included in this product contains copyright that is registered under Hesai Technology. Any third party is not permitted, except as expressly permitted by the licensor or expressly required by applicable law, to decompile, reverse engineer, disassemble, modify, rent, lease, loan, distribute, sublicense, create derivative works based on the whole or any part of the software.

Hesai Product Warranty Service Manual is on the Warranty Policy page of Hesai's official website: https://www.hesaitech.com/warranty-policy/

Hesai Technology Co., Ltd.

Phone: +86 400 805 1233
Website: www.hesaitech.com
Address: Building A, Haisu Culture Plaza, Shanghai, China

Business Email: info@hesaitech.comService
Email: service@hesaitech.com