HESAI

www.hesaitech.com

AT128P

128-Channel Hybrid Solid-State Lidar
User Manual

Classification: C0 (Public)

Doc version: A02-en-261110

Table of Contents

■ **About this manual** 1
Access to this manual 1
Technical support 1
Legends and format 1
■ **Safety notice** 2
Special warnings 2
Operating environment 3
Personnel 5
Installation and operation 5
Repair 9
1 Introduction 10
1.1 Applicability 10
1.2 Operating principle 10
1.3 Basic structure 11
1.4 Channel distribution 12
1.5 Specifications 13
2 Setup 17
2.1 Mechanical installation 17
2.1.1 Typical mounting structure 19
2.1.2 Mounting rigidity and modalities 20
2.1.3 Mounting position 21
2.1.4 Coordinate systems 22
2.1.5 Necessity of thermal design optimization 23
2.2 Electrical interface 24
2.2.1 Pin description 24

2.2.2 Connector use 25
2.2.3 Cables (Ethernet) 27
2.3 Connection box (optional) 28
2.3.1 Ports 30
2.3.2 Connection 32
2.4 Network settings on the host computer 34
2.4.1 In Windows 34
2.4.2 In Ubuntu 38
2.5 Tools 41
3 Data structure 42
3.1 Point Cloud Data Packet 43
3.1.1 Ethernet Header 43
3.1.2 Point cloud UDP data 44
3.1.3 Ethernet tail 50
3.1.4 Point cloud data analysis method 51
4 Parameter interfaces 53
4.1 Network connection 53
4.1.1 Source 53
4.1.2 Destination 55
4.2 Functional settings 56
4.3 State settings 61
4.4 Time sync 63
4.5 Lidar info 65
4.6 Operation Statistics 65
4.7 Upgrade 66
4.8 Logs 66
5 Maintenance 67

6 Troubleshooting 69
Appendix A: Channel distribution data 73
A.1 Angular position and performance 73
A.2 Angle correction file 81
A.3 Angle correction calculation 85
A.3.1 Horizontal angle of the current firing channel 85
A.3.2 Vertical angle of the current firing channel 86
Appendix B: Absolute time of point cloud data 87
B.1 Source of absolute time 87
B.1.1 PTP as the clock source 87
B.2 Absolute time of the Point Cloud Data Packets 88
B.3 Start time of each block 88
Appendix C: Nonlinear reflectivity mapping 89
Appendix D: Legal notice 94

About this manual

Please make sure to read through this user manual before your first use and follow the instructions herein when you operate the product. Failure to comply with the instructions may result in product damage, property loss, personal injuries, and/or a breach of warranty.

Access to this manual

To obtain the latest version, please do one of the following:

- Visit the Download page of Hesai's official website: https://www.hesaitech.com/downloads/
- Contact your sales representative of Hesai.
- Contact Hesai technical support at service@hesaitech.com.

Technical support

If your question is not addressed in this user manual, please contact us at:

- service@hesaitech.com
- https://www.hesaitech.com/technical-support/
- https://github.com/HesaiTechnology

Legends and format

Warnings: Instructions that must be followed to ensure safe and proper use of the product.

Notes: Additional information that may be helpful.

Names of data fields are in monospace font.

For example: `Distance` represents the Distance field.

Safety notice

- Please make sure to read through this safety notice and follow all the instructions and warnings. Failure to comply with the instructions and warnings may result in product damage, property loss, and/or personal injuries.
- Please check the certification information on the product's nameplate. If an agreement has been made not to present certification information on the nameplate, please follow the agreed-to arrangements.
- If you incorporate this lidar product into your product(s), you are required to provide this user manual (or access to this user manual) to the intended users of your product(s).
- This lidar product is intended as a component of an end product. The end-product supplier is responsible for assessing the risk of use in accordance with applicable standards and informing the intended user of safety-related information.
- Should there be other agreements with specific users, the other agreements shall apply.
- Before using a product, please confirm with Hesai the development maturity of the product in a timely manner. For products still in development, Hesai makes no warranty of non-infringement nor assumes any responsibility for quality assurance.

Special warnings

Laser safety

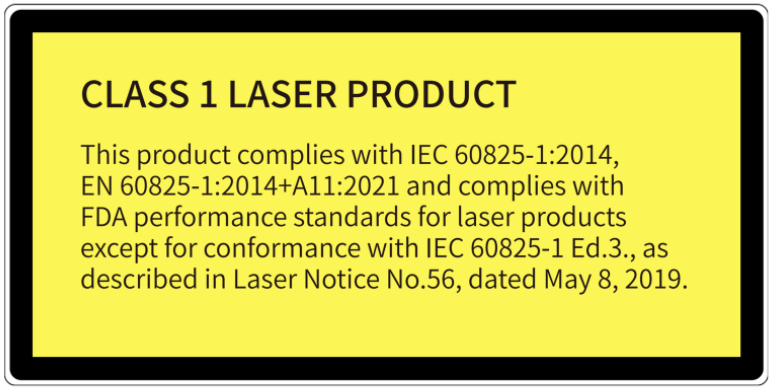

Hot surface



Hot parts!
Burned fingers when handling the parts.
Wait one-half hour after switching off before handling the parts.

Abnormalities

In any of the circumstances listed below, stop using the product immediately:

- If you suspect malfunctions of or damage to the product, with symptoms such as noticeable noise or vibration.
- If you or people in the nearby environment feel discomfort.
- If any device or equipment in the nearby environment malfunctions.

Meanwhile, contact Hesai or an authorized Hesai service provider for more information on product disposal.

Prohibition of disassembly

Unless expressly agreed to in writing by Hesai, do NOT disassemble the product.

Operating environment

Radio frequency (RF) interference

- Before using the product, make sure to read all the signs and notices on the product enclosure (including the nameplate). If specific users require not presenting certification information on the nameplate, please follow the agreed-to arrangements.
- Although the product is designed, tested, and manufactured to comply with the regulations on RF radiation (such as FCC, CE-EMC, or KCC), the radiation from the product may still influence electronic devices.

Vibration

- If significant mechanical shocks and vibration exist in the product's operating environment, please contact Hesai's technical support to obtain the shock and vibration limits of your product model. Exposure to over-the-limit shocks or vibration may damage the product.
- Make sure to package the product in shock-proof materials to avoid damage during transport.

Explosive atmosphere and other air conditions

- Do NOT use the product in any area where a potentially explosive atmosphere is present, such as where the air contains high concentrations of flammable chemicals, vapors, or particulates (including particles, dust, and metal powder).
- Do NOT expose the product to environments that have high concentrations of industrial chemicals, including liquefied gases that are easily vaporized (such as helium). Such exposure can damage or impair product functionality.

Chemical environment

Do NOT expose the product to corrosive or strong polar chemical environments (such as liquids or gases), including but not limited to strong acids, strong bases, esters, and ethers. This is to avoid damage to the product (including but not limited to water resistance failure).

Ingress protection (IP)

Please check the product's user manual for its IP rating (refer to Section 1.5 Specifications). Make sure to avoid any ingress beyond that rating.

Operating temperature

Please check the product's user manual for its operating temperature (refer to Section 1.5 Specifications). Make sure not to exceed the operating temperature range.

Recommended storage conditions

Please store the product in a dry and well-ventilated place. The recommended ambient temperature is 23 ± 5°C, with relative humidity between 30% and 70% RH.

Light interference

Certain precision optical instruments may interfere with the laser light emitted from the product. Please check all the instructions for these instruments and take preventive measures if necessary. For example, protective leather covers are provided for certain product models; when these lidars are temporarily not used for measurement, the leather covers can be applied to block laser light emission.

Personnel

Recommended operator qualifications

The product should be operated by professionals with an engineering background or experience in operating optical, electrical, and mechanical instruments. Always follow the instructions in this manual throughout operation. If needed, please contact Hesai for technical support.

Medical device interference

- Some components in the product can emit electromagnetic fields. If the product operators or people in the nearby environment wear medical devices (such as cochlear implants, implanted pacemakers, and defibrillators), make sure to consult the physicians and medical device manufacturers for medical advice, such as determining whether a safe distance from the product is required.
- If you suspect that the product is interfering with your medical device, stop using the product immediately.

Installation and operation

Power supply

- Before powering on the product, make sure the electrical interfaces are dry and clean. Do NOT power on the product in a humid environment.
- Do NOT use damaged or out-of-spec cables or adapters.
- You are recommended to use only the cables and power adapters provided by Hesai. If you are to design, configure, or select the power supply system (including cables) for the product, make sure to comply with the electrical specifications in the product's user manual (refer to Section 1.5 Specifications and the Power Supply Requirements section if available); for technical support, please contact Hesai.
- Please check Section 2.2 Electrical interface and strictly follow the instructions on plugging/unplugging the connector. If abnormalities already exist (such as bent pins, broken cables, and loose threads), stop using the product and contact Hesai technical support.

Eye safety

The product is a Class 1 laser product. It satisfies the requirements of:

- IEC 60825-1:2014
- EN 60825-1:2014+A11:2021
- 21 CFR 1040.10 and 1040.11 except for deviations (IEC 60825-1 Ed.3) pursuant to Laser Notice No.56, dated May 8, 2019.

CAUTION: Use of controls or adjustments or performance of procedures other than those specified herein may result in hazardous radiation exposure.

CAUTION

- For maximum self-protection, it is strongly warned that users do NOT look into the transmitting laser through a magnifying product (microscope, eye loupe, magnifying glass, etc.).
- This product does not have a power switch. It starts operating once connected to power. During operation, the entire optical window can be regarded as the product's laser emitting window; looking at the optical window can be regarded as looking into transmitting laser.

Product enclosure

- Do NOT crush or puncture the product. If the product enclosure is broken, stop using it immediately and contact Hesai technical support.
- Certain product models contain high-speed rotating parts. To avoid potential injuries, do NOT operate the product if the enclosure is loose.
- If the product enclosure consists of fins or grooves, please wear gloves when handling the product. Applying too much pressure with your bare hands may cause cuts, bruises or other injuries.

Drops and burns

The product contains metal, glass, and plastic, as well as sensitive electronic components. If the product is dropped or burnt, stop using it immediately and contact Hesai technical support.

Optical window

The location of the optical window is illustrated in Section 1 Introduction.

- Do NOT apply protective film, wax or any other substance on the optical window.
- To keep the product's optical window from fingerprints and other stains, do NOT touch the optical window with bare hands. If the optical window is already stained, please refer to the cleaning method in Section 5 Maintenance.
- To prevent scratches, do NOT touch the product's optical window with hard or sharp objects. If scratches already exist, stop using the product and contact Hesai technical support. Severe scratches may affect the quality of the product's point cloud data.

Mounting

- Before operating the product, make sure it is properly and securely mounted. The mounting should prevent the product from leaving its mounting position under external forces (such as collisions, high winds, and stone impacts).
- If the product is installed in a cavity designed as a wet zone, make sure that no water accumulates in the cavity.
- Before installing any exterior part, please ensure that each exterior part and its movable area do not overlap the Field of View (FOV) of the lidar.

The lidar's FOV is the spatial angular range bounded by the horizontal and vertical FOV ranges (see Section 1.5 Specifications); the distance to the origin of the lidar's coordinate system is not limited. For inquiries about the FOV, please contact Hesai technical support.

Hot surface

During operation or the time period after the operation, the product's enclosure can be hot.

- To prevent discomfort or even burns, do NOT touch the product's enclosure with your skin.
- To prevent fires, make sure to keep flammable materials away from the product's enclosure.

Certain product models support active heating of the optical window to reduce the impact of ice and frost.

- While active heating is ON, the optical window can be hot. To prevent discomfort or even burns, avoid direct skin contact with the optical window.
- When the optical window is free of ice and frost, you may turn off active heating.

Peripherals

The product may be used along with accessories and devices, such as suction cup mounts, extension cables, power supplies, network devices, GNSS/PTP devices, CAN transceivers, and cleaning equipment.

When selecting a peripheral, please refer to all relevant specifications in the product's user manual or contact Hesai technical support. Using out-of-spec or unsuitable devices may result in product damage or even personal injuries.

Firmware and software upgrading

Make sure to use only the upgrade files provided by Hesai. Make sure to observe all the instructions provided for that upgrade file.

Customized firmware and software

- Before using a customized version of firmware and software, please fully understand the differences in functions and performance between the customized version and the standard version.
- Make sure to strictly follow all the instructions and safety precautions provided for that customized version. If the product does not function as anticipated, stop using the product immediately and contact Hesai technical support.

Point cloud data processing

- Certain product models support one or more point cloud data processing functions, including but not limited to: Noise Filtering, Interstitial Points Filtering, Retro Multi-Reflection Filtering, and Nonlinear Reflectivity Mapping.
- These functions are configurable and are intended only to assist the user in extracting information from the point cloud data. Users are in full control of whether to use any of these functions. Moreover, users are responsible for analyzing the product's intended application scenarios and evaluating the risk of enabling one or more of these functions in combination.
- To learn about the supported functions of a product model, please contact Hesai technical support.

Repair

- Unless expressly agreed to in writing by Hesai, do NOT disassemble, repair, modify, or alter the product by yourself or through any third party. Such a breach:
  - can result in product damage (including but not limited to water resistance failure), property loss, and/or injuries;
  - shall constitute a breach of warranty.
- For more product repair issues, please contact Hesai or an authorized Hesai service provider.

1 Introduction

1.1 Applicability

This manual applies to the following versions:

Software	4.50.17 or later
Firmware	4.10b894 or later

1.2 Operating principle

Distance measurement: Time of Flight (ToF)

1. A laser diode emits a beam of ultrashort laser pulses onto the target object.
2. The laser pulses are reflected after hitting the target object. The returning beam is detected by an optical sensor.
3. Distance to the object can be accurately measured by calculating the time between laser emission and receipt.

$d = \frac{ct}{2}$	d: Distance c: Speed of light t: Travel time of the laser beam

1.3 Basic structure

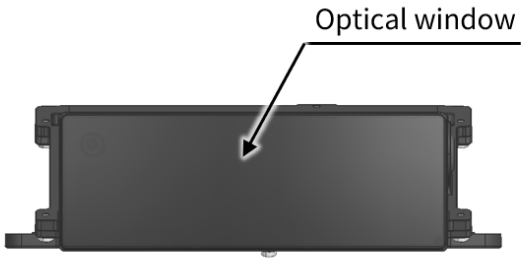

Figure 1. Front view

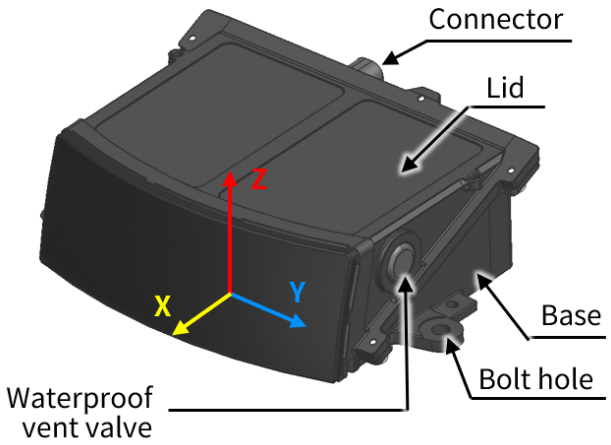

Figure 2. Coordinate system (isometric view)

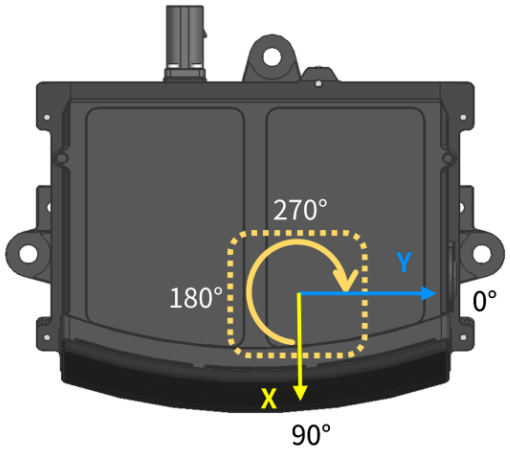

Figure 3. Mirror rotation direction (top view)

The lidar's coordinate system is illustrated in Figure 2.

- Z-axis is the axis of rotation.
- The origin's exact position is shown in Figure 5. All measurements are relative to the origin.

A rotating mirror is used for horizontal scanning, shown as the dotted box in Figure 3.

The lidar's azimuthal position (i.e., azimuth of the current firing channel) is defined in Figure 3.

- The mirror rotates clockwise in the top view.
- Y-axis corresponds to 0°.

1.4 Channel distribution

- The designed vertical resolution is shown in Figure 4 and detailed in Appendix A Channel distribution data.
- Each channel has an intrinsic angle offset, both horizontally and vertically. The offset angles are recorded in this lidar unit's angle correction file (see Section A.2 Angle correction file).

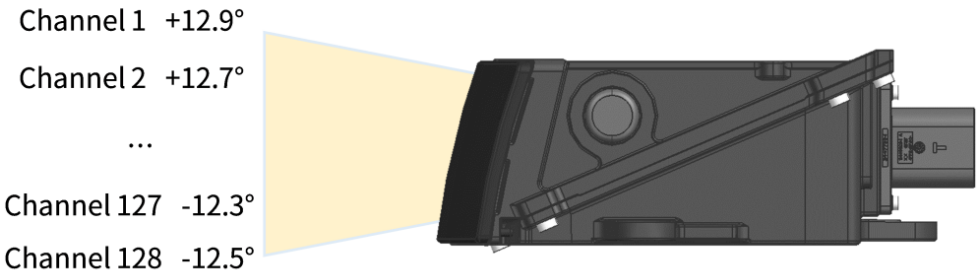

Figure 4. Channel vertical distribution

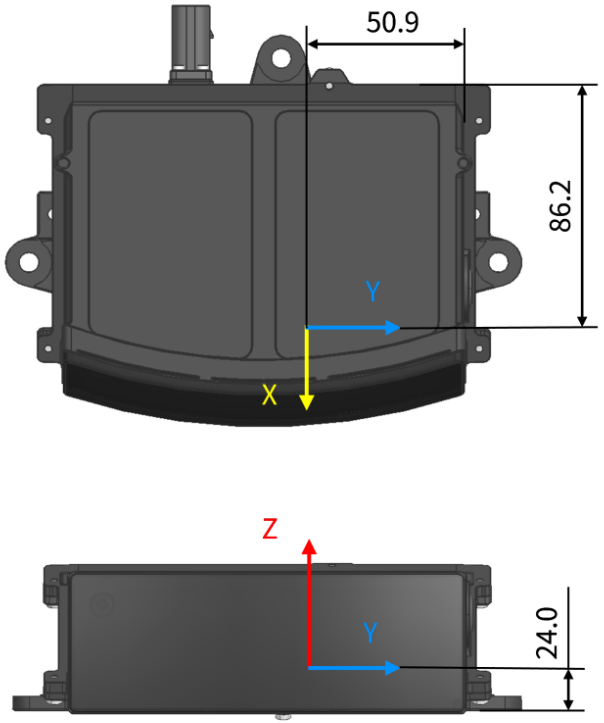

Figure 5. Origin of coordinates (unit: mm)

1.5 Specifications

SENSOR

Scanning method	1-D rotating mirror (hybrid solid-state)
Number of channels	128
Instrumented range ①	0.5 to 260 m
Ranging capability	1 to 210 m (at 10% reflectivity)
Ranging accuracy	±5 cm (typical)
Ranging precision	3 cm (1σ)
Horizontal FOV	120°
Horizontal resolution ②	Far-field: **0.1°** (10 Hz), **0.2°** (20 Hz) Near-field: **0.2°** (10 Hz), **0.4°** (20 Hz)
Vertical FOV	25.4° (-12.5° to 12.9°)
Vertical resolution ②	Far-field: **0.2°** Near-field: **0.8°**
Frame rate	10/20 Hz
Return mode	**Single Return:** Last/Strongest/First **Dual Return:** Last and Strongest, Strongest and First

MECHANICAL/ELECTRICAL/OPERATIONAL

Wavelength	905 nm
Laser class	Class 1 Eye Safe
Ingress protection	IP6K7 & IP6K9K

Dimensions ③	136 × 114 × 49 (WDH, mm)
Rated voltage range ④	DC 9 to 32 V
Power consumption ⑤	13.5 W
Operating temperature ⑥	-40°C to 85°C
Storage temperature ⑥	-40°C to 105°C
Weight ③	940 g

DATA I/O

Data transmission	Automotive Ethernet, 1000BASE-T1, slave mode
Measurements	Distance, azimuth angle, and reflectivity
Valid point rate ⑦	**Single Return:** 1 536 000 points/sec **Dual Return:** 3 072 000 points/sec
Point cloud data rate ⑧	**Single Return:** 55.9/111.8 Mbps (avg/peak) **Dual Return:** 111.8/223.6 Mbps (avg/peak)
Clock source	PTP (802.1AS Automotive, 802.1AS AUTOSAR)
PTP clock accuracy	⩽1 µs
PTP clock drift ⑨	⩽5 µs/s

Specifications are subject to change. Please refer to the latest version of this manual.

Notes to specifications

① **Instrumented range**	• Actual measurement range, confined by the allocated Time of Flight (ToF) for each channel. • For the point cloud data between 0.5 m and 1 m, ranging accuracy and precision cannot be guaranteed.
② **Horizontal and vertical resolution**	• Far-field measurement: >7.2 m • Near-field measurement: 0.5 to 7.2 m
③ **Dimensions and weight**	• May be different for customized models. • The mechanical drawings and data exclusively provided for customized models shall prevail.
④ **Rated voltage range**	Nominal voltages: 12 V and 24 V
⑤ **Power consumption**	• Typical value, not including accessories such as the connection box. • The external power supply should be able to provide at least 45 W.
⑥ **Operating temperature and storage temperature**	• Both refer to ambient air temperature. • During operation, the lidar's surface and internal temperatures may exceed the ambient air temperature. • To obtain the real-time temperatures of the lidar's internal modules, refer to Get Lidar Status (0x09) in the TCP API Reference Manual.

⑦ **Valid point rate**	• Defined as the point cloud data points (number of returns) generated per second.
	• In **Single Return Mode**:
	  ◦ Given: horizontal FOV (120°), horizontal resolution (0.1° at 10 Hz), number of channels (128), and frame rate (10 Hz).
	  ◦ At 10 Hz, each channel generates 120/0.1 = 1200 points per frame; all channels generate 1200 × 128 = 153 600 points per frame, and 1 536 000 points (10 frames) per second.
	• In **Dual Return Mode**, the point rate is twice that in **Single Return Mode**.
	• The actual horizontal FOV of each mirror surface is slightly larger than 120°, so the actual point rate is slightly more than the valid point rate.

⑧ **Point cloud data rate**	• In **Single Return Mode**: ◦ Given: horizontal FOV (120°), horizontal resolution (0.1° at 10 Hz), frame rate (10 Hz), size of a Point Cloud Data Packet (1164 bytes) and the number of blocks in each packet (2) ◦ At 10 Hz, one return is generated for each 0.1° azimuth; thus 1200 (120°/0.1°) returns for each frame and 12 000 returns (10 frames) per second. ◦ Each Point Cloud Data Packet contains two blocks, and each block stores one return. ◦ Therefore, 12 000/2 = 6000 packets are transmitted per second, totaling 6000 × 1164 bytes. ◦ With unit conversion, point cloud average data rate = 6000 × 1164 × 8 × 1E-6 ≈ 55.9 Mbps. • In **Dual Return Mode**, point cloud average data rate is twice that in **Single Return Mode**. • Because the duty cycle for point cloud data transmission is approximately 50%, the peak data rate is approximately twice the average data rate in the table.
⑨ **PTP clock drift**	Defined as the drift at a constant temperature after the lidar (slave clock) loses connection to the PTP master.

2 Setup

Before operating the lidar, strip away the transparent protective film on the optical window.

The information in this section may be different for customized models. The mechanical drawings and data exclusively provided for customized models shall prevail.

2.1 Mechanical installation

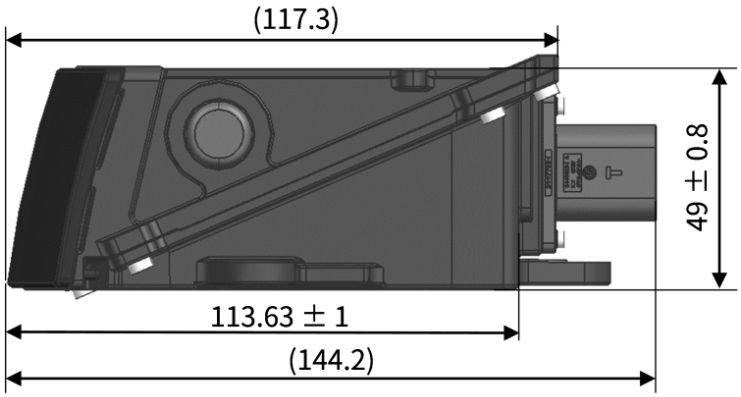

Figure 6. Right side view (unit: mm)

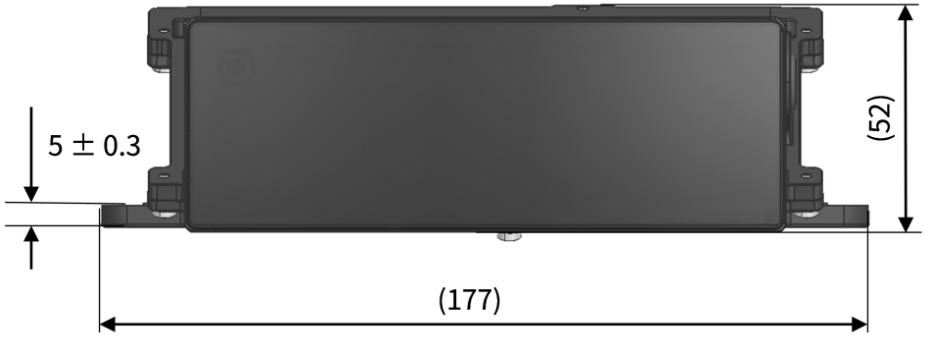

Figure 7. Front view (unit: mm)

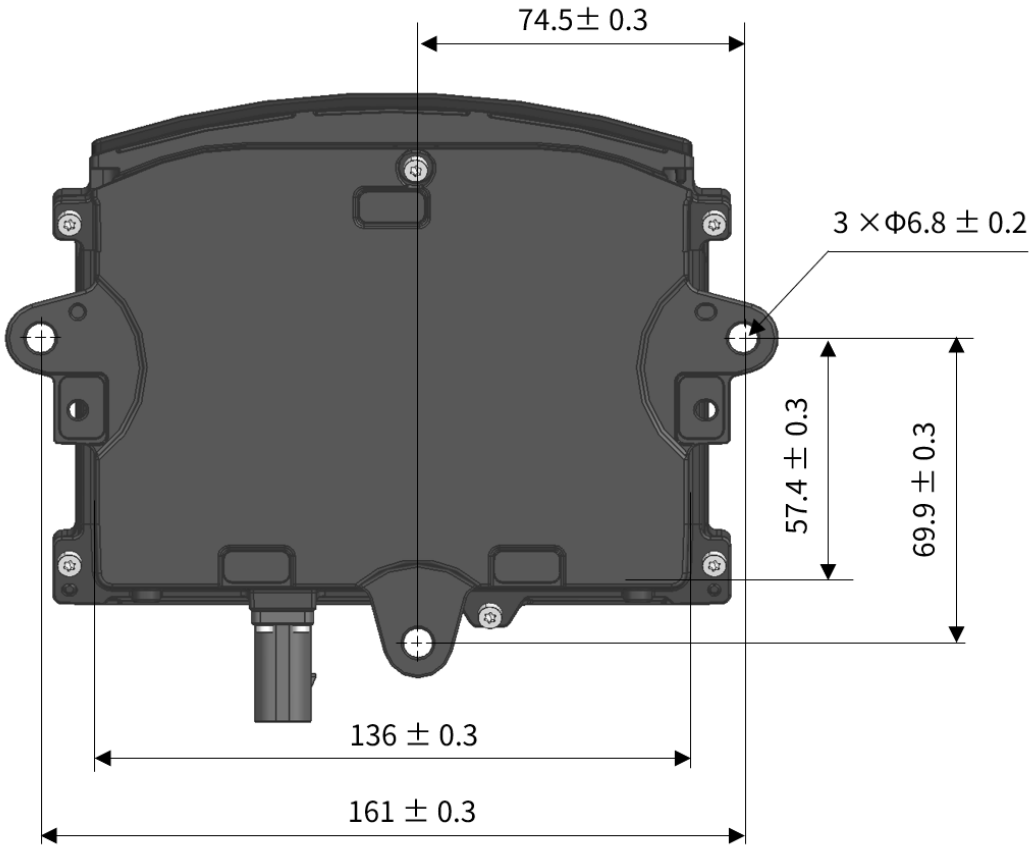

Figure 8. Bottom view (unit: mm)

2.1.1 Typical mounting structure

The lidar can be mounted using through holes on the lidar base.

The mounting scheme should not damage the lidar (including the screw threads).



Figure 9. Through holes on the lidar base

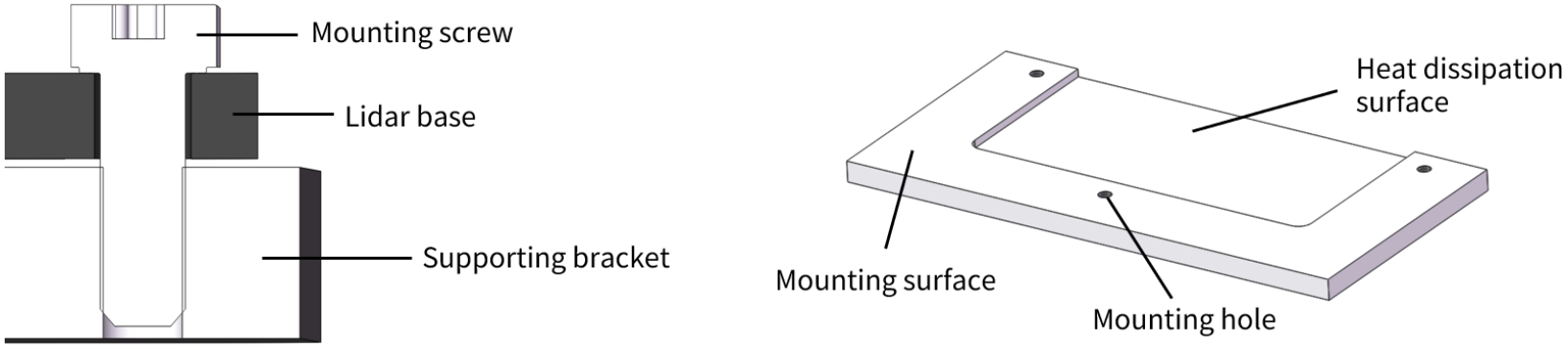

Figure 10. Supporting bracket on the vehicle body

Screw Specifications: M5 or M6
Metric property class: ⩾8.8

For carbon steel screws, the recommended parameters are as follows:

Screw specification	Number of screws
M5	⩾4
M6	⩾3

For screws with different materials or thread forms, the parameters should be adjusted.

2.1.2 Mounting rigidity and modalities

- Please provide the details of the mounting structure for Hesai's assessment, as any deviation in the mounting surface of the bracket may impair lidar performance.
- The mounting bracket should be stable and reliable. The intrinsic frequency of the bracket is generally recommended to be over 50 Hz. The intrinsic frequency of a specific vehicle model should be assessed according to its vibration excitation.
- To prevent the impact of external forces, only connect the lidar at its mounting points. If any other part of the lidar needs to be connected, please confirm with Hesai in advance.
- The minimum spacing between the lidar and its surrounding parts should be over 10 mm. This is to prevent the lidar from scraping and bumping during normal operation, mounting, and dismounting.
- To prevent loss of effective FOV, the mounting tolerances should be within ±5 mm (position) and ±1 deg (angularity) in the directions of X, Y, and Z axes of the vehicle coordinate system (see Figure 2. Coordinate system (isometric view)).
- Contaminants on the optical window (such as snow or mud) can impair lidar performance. Active cleaning equipment for the optical window is recommended.

2.1.3 Mounting position

- The lidar's FOV should not be obscured.
- The mounting height should be over 300 mm above the ground.

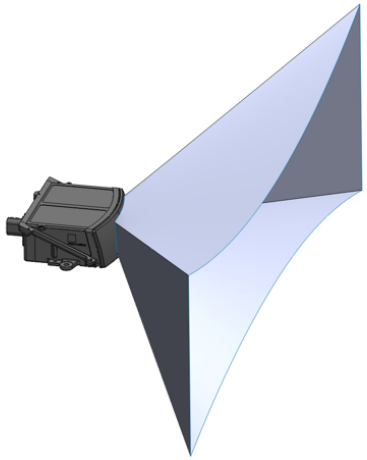

Figure 11. Lidar's FOV

2.1.4 Coordinate systems

The coordinate systems of the lidar and vehicle are illustrated below.

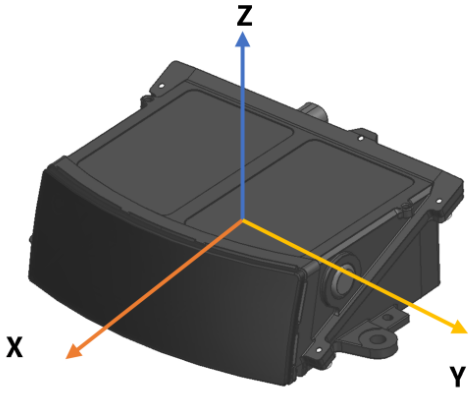

Figure 12. Lidar coordinates

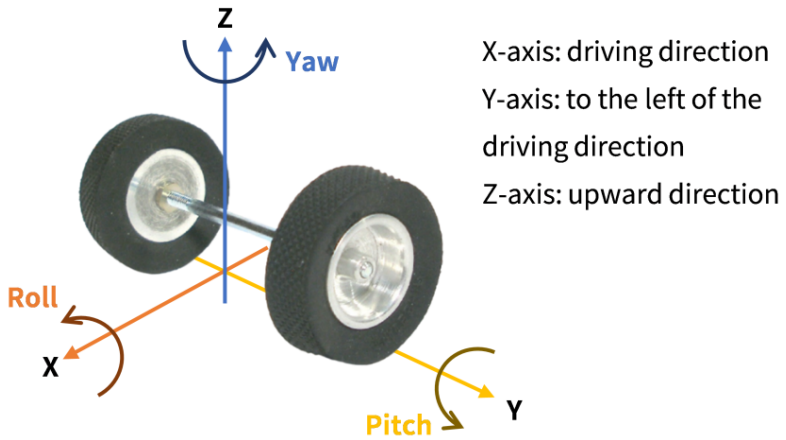

Figure 13. Vehicle coordinates

2.1.5 Necessity of thermal design optimization

The lidar's temperature performance is strongly correlated with three factors:

- Thermal characteristics of the lidar
- Environmental conditions in vehicle's application scenario
- Mounting scheme

With the first two factors predefined, the mounting scheme needs to be optimized to ensure that the lidar performs as expected under extreme operating conditions.

However, the evaluation of thermal risks should not be carried out on the lidar alone — all the relevant thermal loads (the surrounding parts on the vehicle) and the mounting environment (such as the material of the mounting bracket) jointly affect the lidar's heat dissipation capability.

Therefore, systematic thermal design optimization is a necessary step in designing the lidar's mounting scheme. For more details, please contact Hesai's technical support.

2.2 Electrical interface

TE Connectivity Part Number: 2446023-1 (male socket, on the lidar)

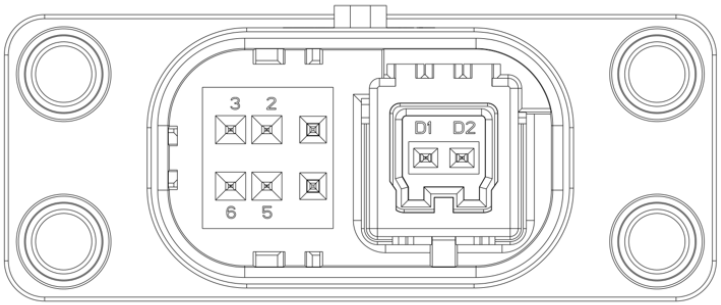

Figure 14. TE connector (male socket)

2.2.1 Pin description

No.	Signal	Voltage
1	VCC	9 to 32 V
2	Reserved	-
3	Reserved	-
4	GND	0 V
5	Reserved	-
6	Reserved	-
D2	MDI-P	-
D1	MDI-N	-

Avoid touching the reserved wires or ports with bare hands.

2.2.2 Connector use

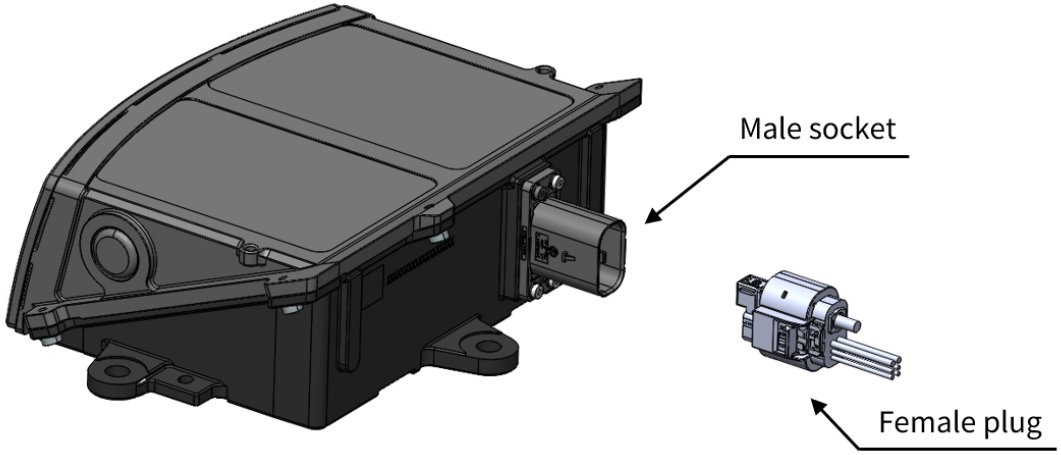

Figure 15. Connectors

- Before connection, check the pins on the socket and the holes on the plug. In case of bent pins or damaged holes, stop using the connector and contact technical support.
- To prevent breakdowns, turn off the power source before connection and disconnection.
- Do NOT attempt to force open a connection by pulling on the cables or by twisting the connectors in any way. Doing so can loosen the connectors' shells, or even damage the contacts.
- If the connector's shell is accidentally pulled off, stop using the connector and contact Hesai technical support. Do NOT attempt to assemble the connector's shell and cable collet; do NOT connect a connector without its shell. Doing so may damage the lidar's circuits.
- For further troubleshooting, please contact Hesai technical support or obtain work instructions from the connector manufacturer.
- The connector is designed to withstand at least **20** mating cycles; exceeding this number may increase the risk of connector damage.

Connection	1. Turn off the power source. 2. Make sure the plug's red CPA is on the same side as the socket's locking nose. 3. Push the plug straight into the socket until you feel and hear a click. 4. Push the red CPA towards the socket until you feel and hear a click.
Disconnection	1. Turn off the power source. 2. Pull the red CPA away from the socket until you feel and hear a click. 3. Depress the black locking latch; then pull the plug from the socket.

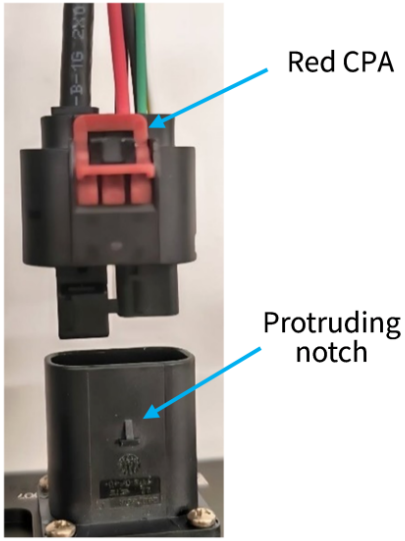

Figure 16. Connection

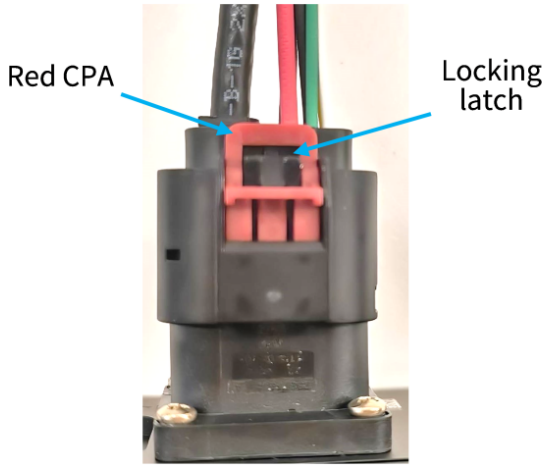

Figure 17. Disconnection

2.2.3 Cables (Ethernet)

Outer diameter (OD) = 4.10 ± 0.20 mm
Minimum bend radius:

- Single: 5 × OD
- Multiple: 15 × OD

2.3 Connection box (optional)

Users may connect the lidar with or without a connection box.
The connection box has a power port and a standard Ethernet port.

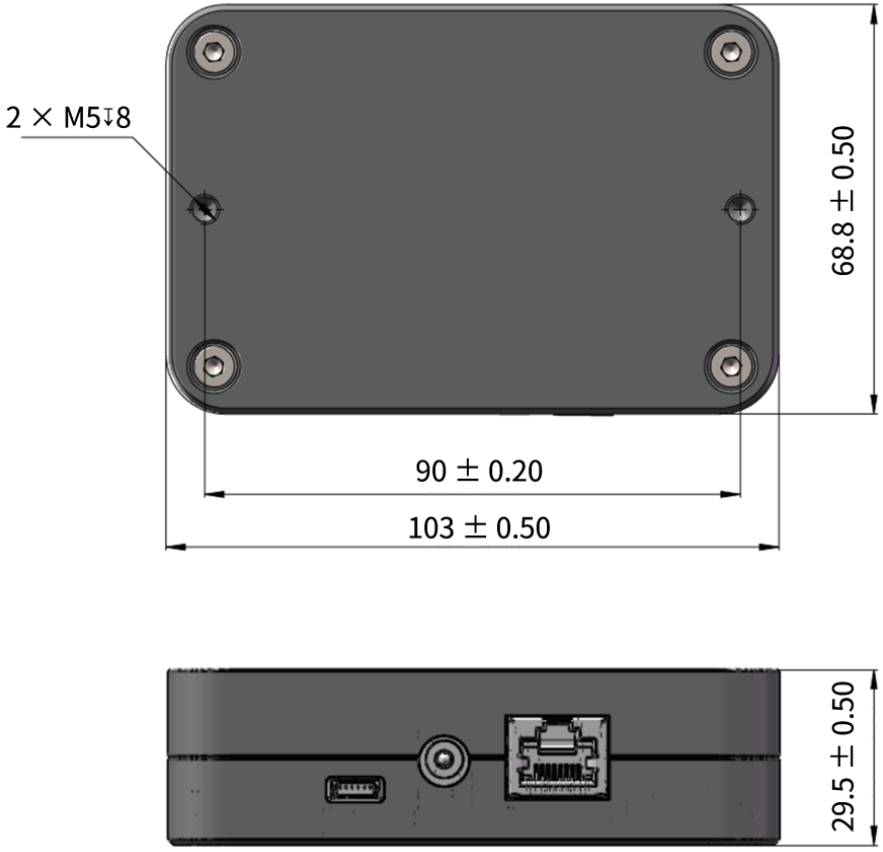

Figure 18. Connection box (unit: mm)

An additional cable assembly is used for connecting the lidar (on the left) and the connection box (on the right), as shown below.

One cable's head cannot connect to another cable's tail, so each lidar can only use one cable.

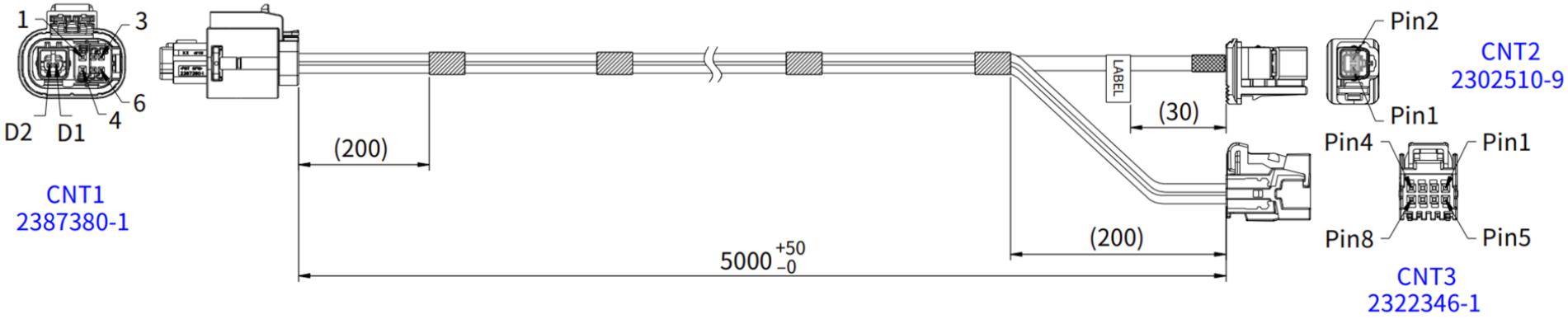

Figure 19. Cable assembly between lidar and connection box (unit: mm)

The wire colors and cross-section areas are listed below.

Pin number on CNT1	Pin number on CNT3	Signal	Wire color	Wire cross section
Pin 1	Pin 4	VCC	Red	0.75 mm^2
Pin 4	Pin 8	GND	Black	0.75 mm^2

Pin number on CNT1	Pin number on CNT2	Signal	Wire color	Wire cross section
D2	Pin 1	MDI-P	White	-
D1	Pin 2	MDI-N	Green	-

2.3.1 Ports

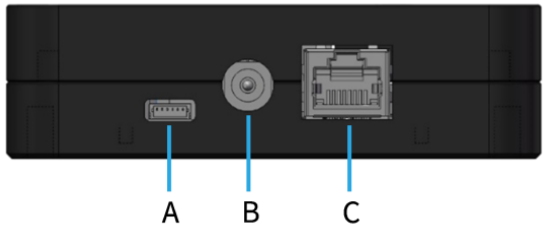

Figure 20. Connection box (front)

Port number	Port name	Description
A	Reserved port	Do NOT touch this port or connect it to external signals.
B	Power port	Device-side connector: DC power jack • Manufacturer: Same Sky Devices • Part Number: PJ-057AH • Reference drawing: https://www.sameskydevices.com/product/resource/pj-057a.pdf Cable-side mating connector: DC barrel plug (DC-005 or equivalent) • Outer diameter: 5.5 mm • Inner diameter: 2.1 mm • Insertion depth: 9.45 mm • Polarity: center positive
C	Standard Ethernet port	RJ45, 1000 Mbps Ethernet

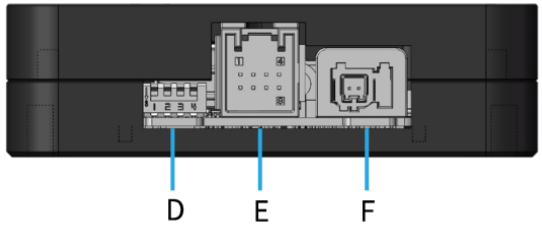

Figure 21. Connection box (back)

Port number	Port name	Description
D	Reserved port	Do NOT toggle or connect the DIP switches.
E	Power output port	See CNT3 in Figure 19; Part Number: 2322346-1
F	Automotive Ethernet port	See CNT2 in Figure 19; Part Number: 2302510-9

2.3.2 Connection

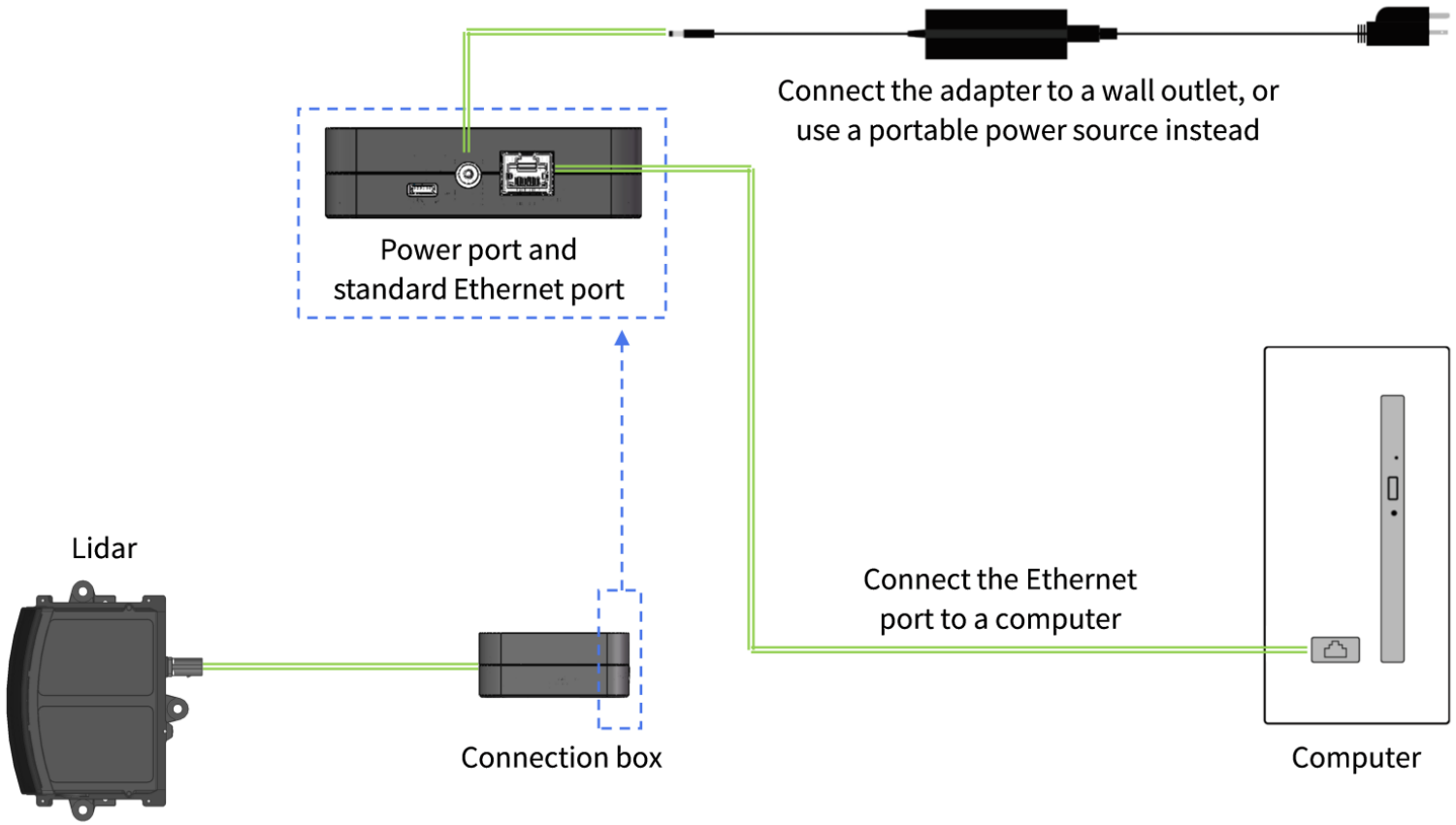

Figure 22. Connection with PTP (software simulation)

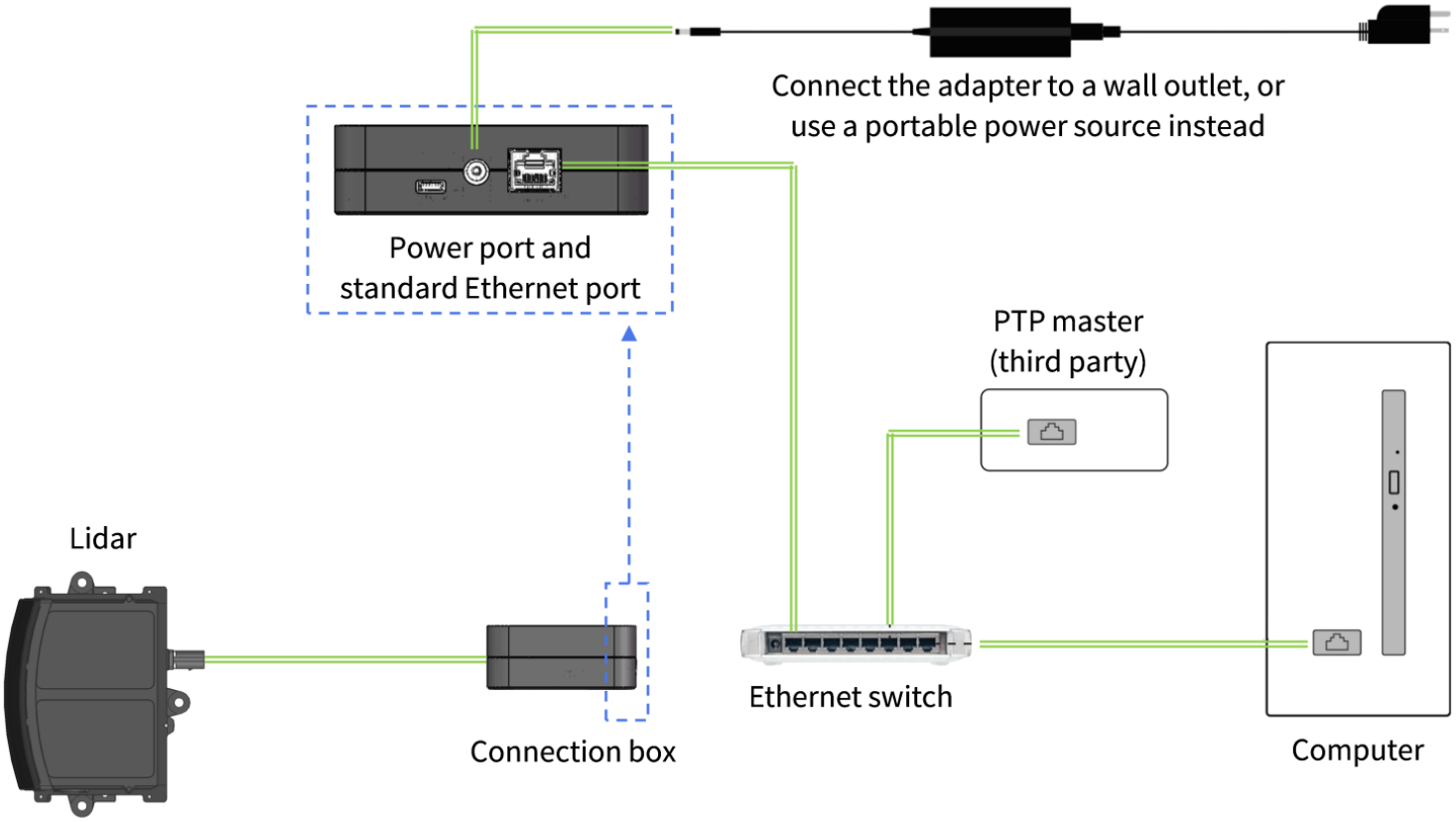

Figure 23. Connection with PTP (hardware device)

2.4 Network settings on the host computer

To analyze point cloud data, configure the network parameters of the host computer:

Network parameters	Value	Description
IP address	192.168.1.**X**	**X** can be selected from 2 to 200 and from 202 to 254.
Subnet mask	255.255.255.0	-
VLAN ID	Range: 1 to 4094	Required only when VLAN tagging is used. Make sure the host computer and the lidar use the same VLAN ID.

2.4.1 In Windows

1. **[Control Panel]** > **[Network and Internet]** > **[Network and Sharing Center]** > **[Change adapter settings]**.
2. Right-click **[Ethernet]** or **[Ethernet X]** which shows Ethernet connection (with no red cross at the bottom left of the icon) > Select **[Properties]**.

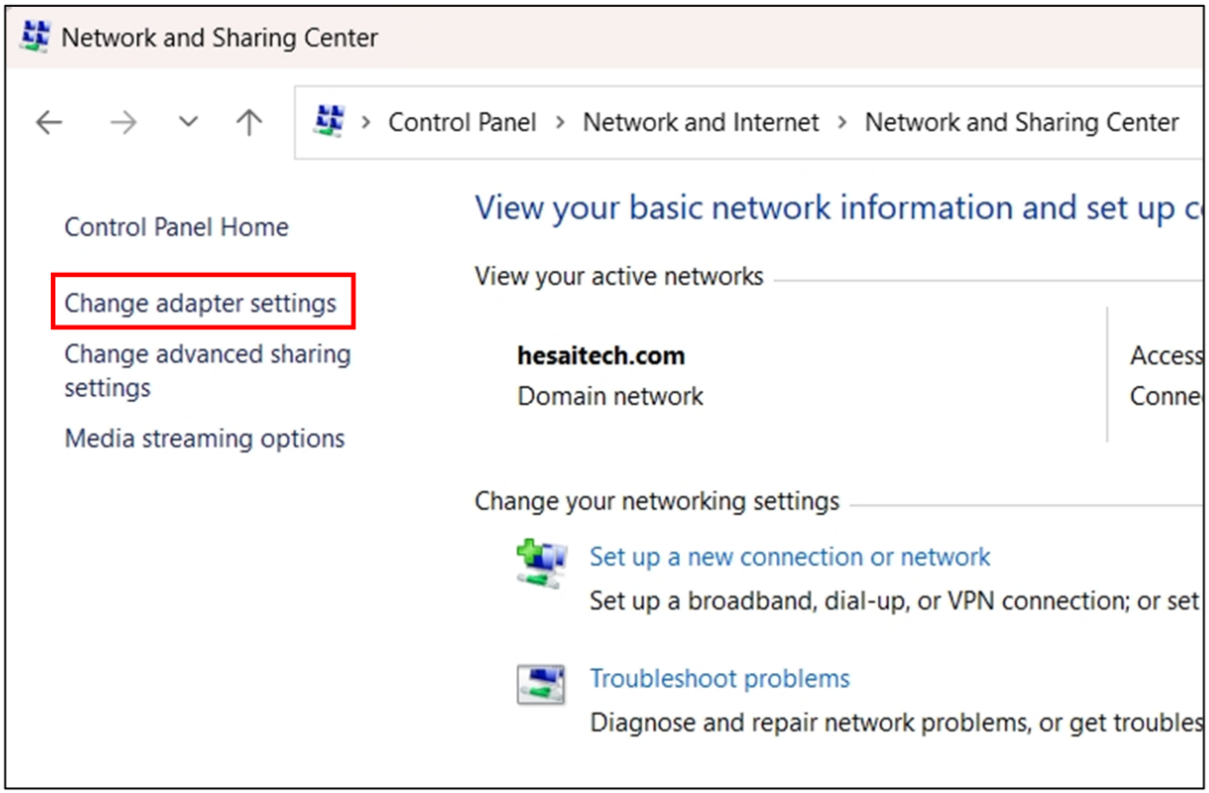
Network and Sharing Center
Control Panel › Network and Internet › Network and Sharing Center
Control Panel Home
Change adapter settings
Change advanced sharing settings
Media streaming options
View your basic network information and set up c
View your active networks
hesaitech.com
Domain network
Access
Conne
Change your networking settings
Set up a new connection or network
Set up a broadband, dial-up, or VPN connection; or set
Troubleshoot problems
Diagnose and repair network problems, or get troubles

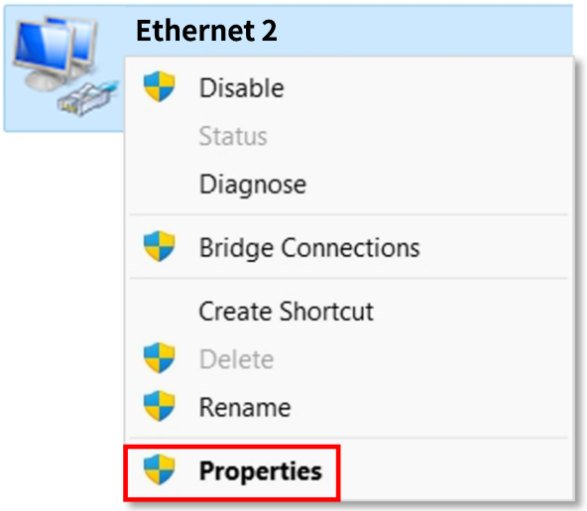
Ethernet 2
Disable
Status
Diagnose
Bridge Connections
Create Shortcut
Delete
Rename
Properties

3. Double-click [**Internet Protocol Version 4 (TCP/IPv4)**].
4. Select [**Use the following IP addresses**] > Input the host computers's IP address and subnet mask.

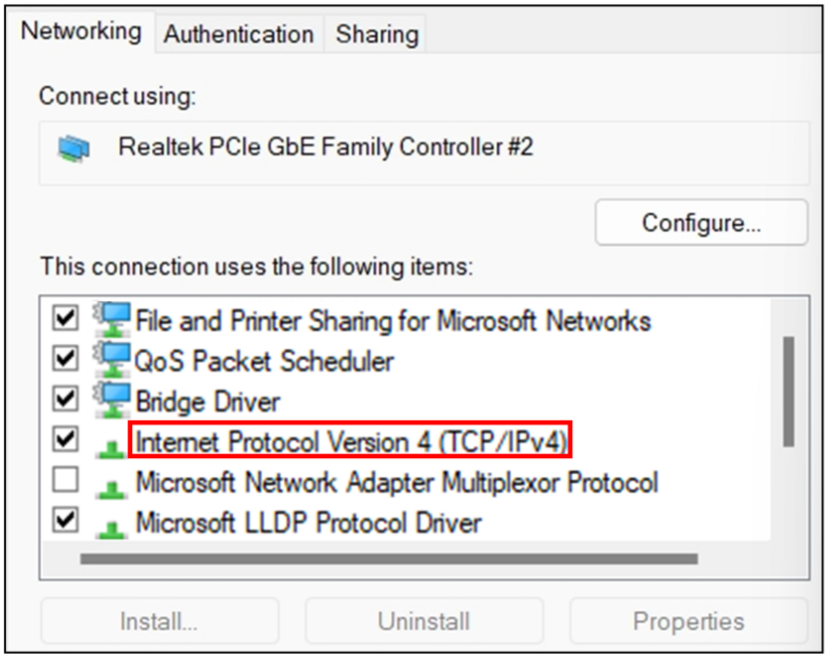

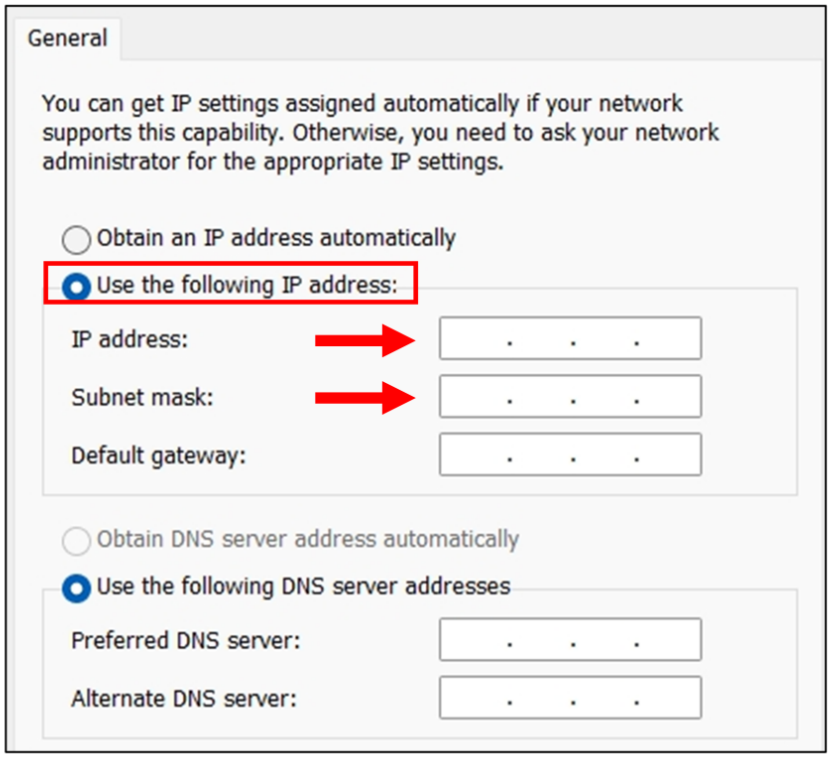

Ping command can be used to check the connection:

1. Press Win + R to open the Run dialog box.
2. Enter "cmd" and click [**OK**] to open the Command Prompt.
3. Enter "ping 192.168.1.201" and check the output.

5. To enable VLAN tagging:
   Click [**Configure**] > Under the [**Advanced**] tag, select [**VLAN ID**] from the [**Property**] list > Input a VLAN ID in the [**Value**] box > Click [**OK**].

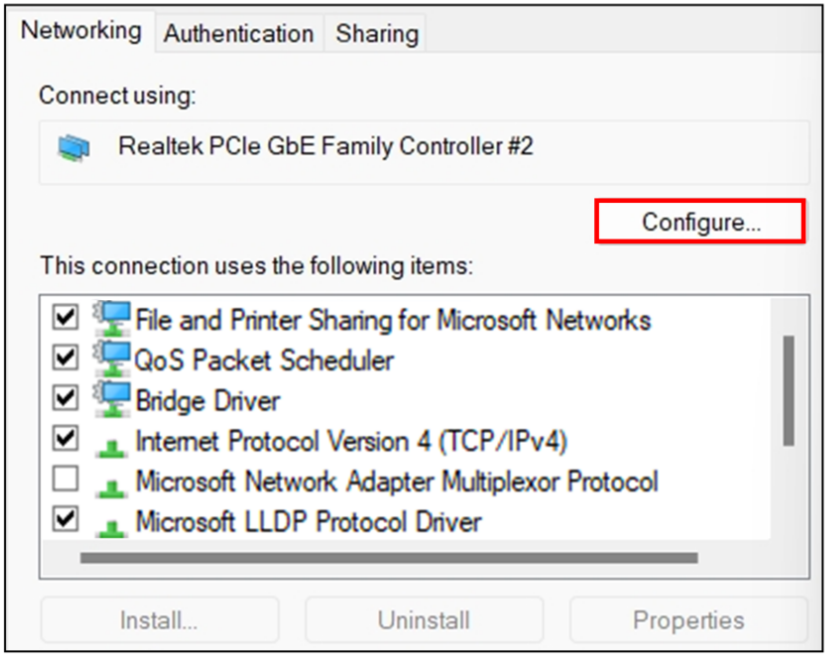

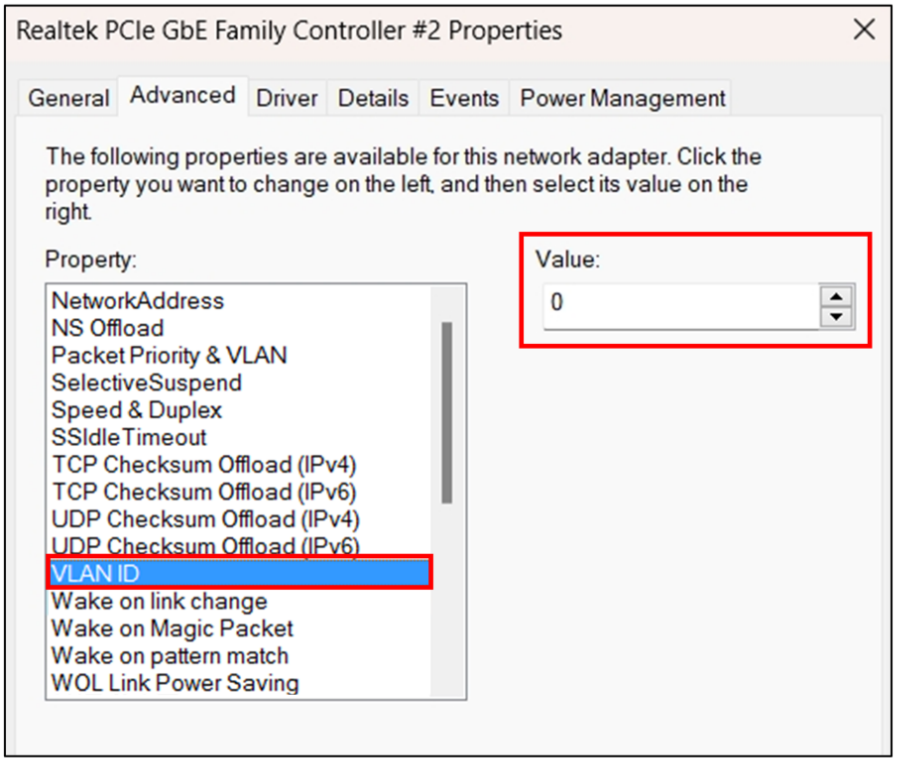

If the [**Property**] list has no [**VLAN ID**], it is recommended to update the network adapter driver.

2.4.2 In Ubuntu

1. Find the host computer's network interface name.

   Method 1

   a. Open **Settings — Network**.
   b. Look for the interface whose status is "Connected".
   The name in parentheses after "Ethernet" is the network interface name.



   Method 2

   a. Open a terminal and run this command:

```
ifconfig
```

   b. Look for the interface with non-zero RX packets and bytes.
   (In the example below, **enp5s0** shows non-zero Rx packets and bytes, indicating active data transmission.)

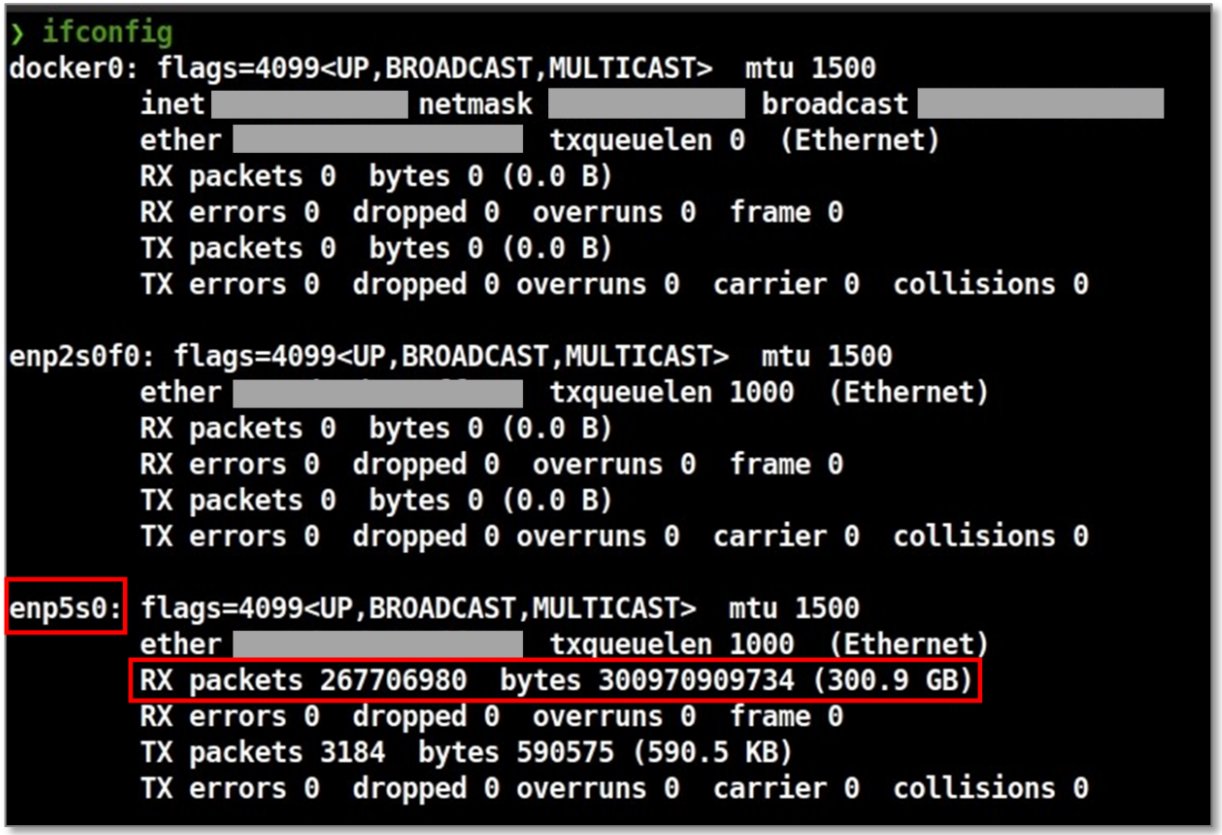
❯ ifconfig
docker0: flags=4099<UP,BROADCAST,MULTICAST> mtu 1500
inet [redacted] netmask [redacted] broadcast [redacted]
ether [redacted] txqueuelen 0 (Ethernet)
RX packets 0 bytes 0 (0.0 B)
RX errors 0 dropped 0 overruns 0 frame 0
TX packets 0 bytes 0 (0.0 B)
TX errors 0 dropped 0 overruns 0 carrier 0 collisions 0
enp2s0f0: flags=4099<UP,BROADCAST,MULTICAST> mtu 1500
ether [redacted] txqueuelen 1000 (Ethernet)
RX packets 0 bytes 0 (0.0 B)
RX errors 0 dropped 0 overruns 0 frame 0
TX packets 0 bytes 0 (0.0 B)
TX errors 0 dropped 0 overruns 0 carrier 0 collisions 0
enp5s0: flags=4099<UP,BROADCAST,MULTICAST> mtu 1500
ether [redacted] txqueuelen 1000 (Ethernet)
RX packets 267706980 bytes 300970909734 (300.9 GB)
RX errors 0 dropped 0 overruns 0 frame 0
TX packets 3184 bytes 590575 (590.5 KB)
TX errors 0 dropped 0 overruns 0 carrier 0 collisions 0

When not using VLAN

2. Run this command in the terminal:

```
sudo ifconfig ${interface_name} ${ip_addr}
```

   - Replace `${interface_name}` with the host computer's network interface name.
   - Replace `${ip_addr}` with the host computer's IP address.

When using VLAN

2. Run this command in the terminal:

```
sudo ip link add link ${interface_name} name ${interface_name}.${vlan_id} type vlan id ${vlan_id}
sudo ip link set up ${interface_name}.${vlan_id}
sudo ip addr add ${ip_addr}/24 dev ${interface_name}.${vlan_id}
ip addr show ${interface_name}.${vlan_id}
```

- Replace `${interface_name}` with the host computer's network interface name.
- Replace `${vlan_id}` with the host computer's VLAN ID.
- Replace `${ip_addr}` with the host computer's IP address.

2.5 Tools

- The following tools are supported by most models. Contact Hesai technical support to confirm applicability.
- For a customized model or an early prototype, contact Hesai technical support to confirm applicability.

Tool	Purpose	Where to find it
PandarView 2 (point cloud visualization software)	To record and display point cloud data, or set parameters.	Public versions (for selected models only): https://www.hesaitech.com/downloads/
API	To set parameters, check device info and status, or upgrade firmware and software.	Contact Hesai technical support to confirm the API applicable to this model and obtain the corresponding documentation.
Software development kits (SDKs) and ROS drivers	To assist development.	Public versions (for selected models only): https://github.com/HesaiTechnology
Web control	To set parameters, check device info and status, or upgrade firmware and software.	If this model supports web control, see the "Web Control" section of this manual.

3 Data structure

Unless otherwise specified, all the multi-byte fields are unsigned values transmitted in little-endian format.

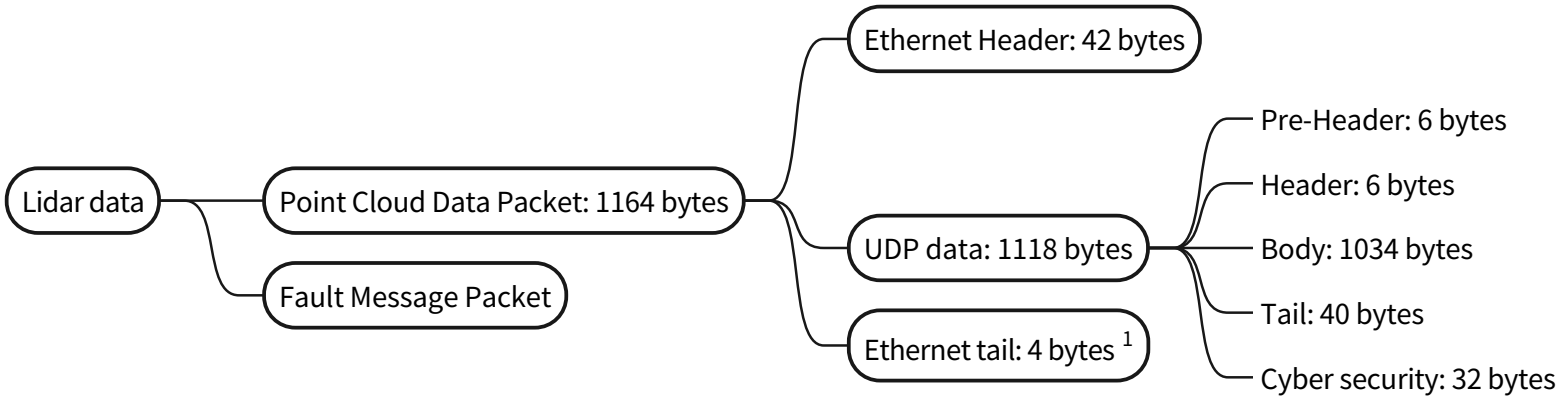

1. Network monitoring software (such as WireShark) usually does not display the **Ethernet tail** (4 bytes).

Figure 24. Data structure

The data format of the Fault Message Packet is described in the Safety Manual. Please contact Hesai technical support for more information.

3.1 Point Cloud Data Packet

Before receiving Point Cloud Data Packets, please perform Network settings on the host computer.

3.1.1 Ethernet Header

Transmitted in big-endian format.

Point Cloud Data Packet: Ethernet Header

Field	Byte(s)	Description
Ethernet II MAC	12	Destination MAC: xx:xx:xx:xx:xx:xx (FF:FF:FF:FF:FF:FF for broadcast) Source MAC: xx:xx:xx:xx:xx:xx
Ethernet Data Packet Type	2	0x08, 0x00
Internet Protocol	20	Protocol parameters
UDP Port Number	4	Source port (default: 10000) Destination port (default: 2368)
UDP Length	2	Eight bytes more than point cloud UDP data (see Figure 24. Data structure).
UDP Checksum	2	Checksum of the Ethernet Header

3.1.2 Point cloud UDP data

Pre-Header

Field	Byte(s)	Description
Start of Packet	1	0xEE
Start of Packet	1	0xFF
Protocol Version Major	1	Main class of the point cloud UDP packet structure Current value: 0x04
Protocol Version Minor	1	Subclass of the point cloud UDP packet structure Current value: 0x03
Reserved	2	-

Header

Field	Byte(s)	Description
Channel Num	1	0x80 (128 channels)
Block Num	1	0x02 (2 blocks per packet)
First Block Return	1	Reserved
Dis Unit	1	Unit of the `Distance` field in Section 3.1.2.3 Body. Default: 0x04 (4 mm)
Return Num	1	0x02 (Each channel can generate two returns maximum.)

<table>
<tr><th>Field</th><th>Byte(s)</th><th>Description</th></tr>
<tr><td>Flags</td><td>1</td><td>Each bit indicates whether this data packet contains certain information.
1 — YES
0 — NO
<table><tr><th>Bit</th><th>Value</th></tr><tr><td>[7:3] Reserved</td><td>-</td></tr><tr><td>[2] Functional Safety</td><td>0</td></tr><tr><td>[1] Reserved</td><td>-</td></tr><tr><td>[0] UDP Sequence</td><td>1</td></tr></table></td></tr>
</table>

Body

Return mode

See the `Return Mode` field in Section 3.1.2.4 Tail.

In Single Return mode, the measurements of each round of firing are stored in one block.

In Dual Return mode, the measurements of each round of firing are stored in two adjacent blocks, and the `Azimuth` fields of these two blocks are the same.

Return mode	Odd-numbered block	Even-numbered block	Note
Last and Strongest	Last return	Strongest return	If the last return is also the strongest, then the even-numbered block stores the second strongest return.
Strongest and First	Strongest	First	If the Strongest return is also the first, then the odd-numbered block stores the second strongest return.

Field	Byte(s)	Description
Azimuth 1	2	Block 1: Low-resolution part of the encoder angle Unit: 0.01° • Encoder angle is measured by the optical encoder and is used as the current reference azimuth of this block. • To convert from encoder angle to point cloud horizontal angle, refer to Section A.3 Angle correction calculation.
Fine Azimuth 1	1	Block 1: High-resolution part of the encoder angle Unit: 0.01°/256 Encoder angle of Block 1 = `Azimuth 1` × 0.01° + `Fine Azimuth 1` × 0.01°/256
Block 1	512	Block 1: Measurements made by each channel (starting from Channel 1) (see the table below).
Azimuth 2	2	Block 2
Fine Azimuth 2	1	
Block 2	512	
CRC 1	4	CRC-32 checksum of the Body

Each block in the Body

<table>
<tr><th>Field</th><th>Byte(s)</th><th>Description</th></tr>
<tr><td>Channel 1</td><td>4</td><td>Measurements of Channel 1
<table>
<tr><th>Field</th><th>Byte(s)</th><th>Description</th></tr>
<tr><td>Distance</td><td>2</td><td>Object distance = Distance × Dis Unit
ℹ Dis Unit is specified in Section 3.1.2.2 Header.</td></tr>
<tr><td>Reflectivity</td><td>1</td><td>Range: 0 to 255

Default: Linear reflectivity mapping (reflectivity value = Reflectivity Field × 1%)
Also refer to Appendix C Nonlinear reflectivity mapping.
ℹ The mapping between this field and target reflectivity can be selected using LidarUtilities in PandarView 2 or PTC commands.</td></tr>
<tr><td>Confidence</td><td>1</td><td>Low confidence flag, showing the confidence of the return signal.
Value: 1 (low confidence), 0 (normal)
ℹ Low-confidence data points improve the detection of low-reflectivity objects.</td></tr>
</table></td></tr>
<tr><td>…</td><td>…</td><td>…</td></tr>
<tr><td>Channel 128</td><td>4</td><td>Measurements of Channel 128</td></tr>
</table>

Tail

Field	Byte(s)	Description
Reserved	6	-
High Temperature Shutdown Flag	1	0x01 — High temperature 0x00 — Normal operation • When high temperature is detected, the shutdown flag will be set to 0x01, and the system will shut down after 60 s. The flag remains 0x01 during the 60 s and the shutdown period. • When the system is no longer in high temperature status, the shutdown flag will be reset to 0x00 and the system will automatically return to normal operation.
Reserved	11	-
Motor Speed	2	Spin rate of the motor Unsigned integer Unit: 0.1 RPM • By default, each of the three mirror surfaces corresponds to a point cloud frame. Thus, for every motor rotation, three frames are generated. • Spin rate of the motor (RPM) = frame rate (Hz) × 60 / 3
UTC Fractional Seconds	4	The microsecond part of the Coordinated Universal Time (UTC) of this data packet. Unit: μs The absolute time of the Point Cloud Data Packets is defined in Appendix B Absolute time of point cloud data.
Return Mode	1	0x33 — First 0x37 — Strongest 0x38 — Last 0x39 — Last and Strongest 0x3C — Strongest and First

<table>
<tr><th>Field</th><th>Byte(s)</th><th>Description</th></tr>
<tr><td>Factory Information</td><td>1</td><td>Fixed: 0x42</td></tr>
<tr><td>Date & Time</td><td>6</td><td>Whole second part of the Coordinated Universal Time (UTC) of this data packet

The current time representation mode is indicated by the first byte:
• Non-zero: broken-down time
• Zero: calendar time (default)

Broken-down time<table><tr><th>Each byte</th><th>Range (decimal)</th></tr><tr><td>Year (current year minus 1900)</td><td>⩾70</td></tr><tr><td>Month</td><td>1 to 12</td></tr><tr><td>Day</td><td>1 to 31</td></tr><tr><td>Hour</td><td>0 to 23</td></tr><tr><td>Minute</td><td>0 to 59</td></tr><tr><td>Second</td><td>0 to 59</td></tr></table>Calendar time (default)
Transmitted in big-endian format.<table><tr><td>Byte 0</td><td>Fixed: 0x00</td></tr><tr><td>Bytes 1 to 5</td><td>Number of seconds since the Unix epoch (1970–01–01 00:00:00 UTC)</td></tr></table>The absolute time of the Point Cloud Data Packets is defined in Appendix B Absolute time of point cloud data.</td></tr>
</table>

Field	Byte(s)	Description
UDP Sequence	4	Sequence number of this UDP packet Range: 0 to 0xFF FF FF FF
CRC 2	4	CRC-32 checksum of the Tail

Cyber security

Field	Byte(s)	Description
Reserved	32	-



Cybersecurity functions are described in the Security Manual. Please contact Hesai technical support for more information.

3.1.3 Ethernet tail

Field	Byte(s)	Description
FCS	4	Frame check sequence

3.1.4 Point cloud data analysis method

Take **Channel 5** in **Block 2** as an example.

Analyze the vertical and horizontal angles of a data point

1. Calculate the vertical angle (v_angle) of **Channel 5** according to Section A.3 Angle correction calculation.
   - 0° represents the horizontal direction.
   - The upward direction is defined as positive.
   - Channel number counts from 1, top to bottom.
2. Calculate the horizontal angle (h_angle) of **Channel 5** according to Section A.3 Angle correction calculation.
   - The 0° position is defined in Figure 3. Mirror rotation direction (top view).

Analyze the distance of a data point

Use the `Distance` field of **Block 2: Channel 5** in Section 3.1.2.3 Body.

Draw the data point in a spherical or rectangular coordinate system

In a spherical coordinate system, the vertical and horizontal angles are defined in the figure below.

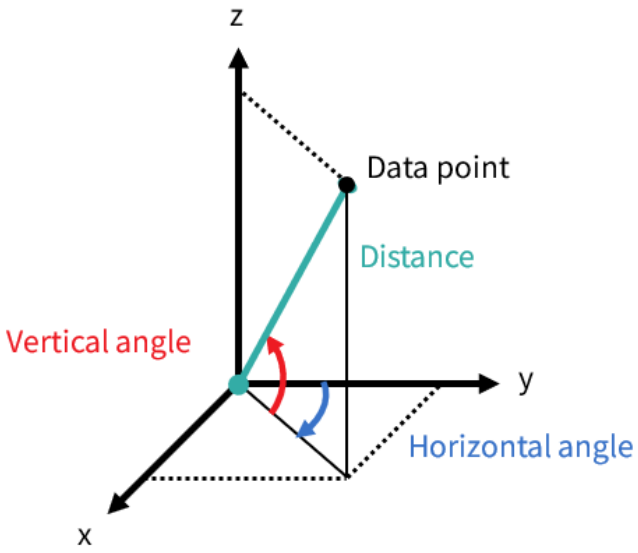

Obtain the real-time point cloud data by analyzing and drawing every data point in each frame.

4 Parameter interfaces

All the parameters in this section can be accessed using API; some of the parameters are also shown in LidarUtilities in PandarView 2.

4.1 Network connection

4.1.1 Source

Source IPv4 Address

Option(s)	Description
Default: 192.168.1.201	Applies to both UDP and PTC ports.

Source IPv4 Subnet Mask

Option(s)	Description
Default: 255.255.255.0	Applies to both UDP and PTC ports.

Source IPv4 Gateway

Option(s)	Description
Default: 192.168.1.1	Applies to both UDP and PTC ports.

Ethernet Communication Mode

Option(s)	Description
Slave (default) Master	Role of the lidar in automotive Ethernet communication. When the lidar is in **Slave** mode (default), the host computer shall be in Master mode. ⚠ • Connection cannot be made if the lidar and the host computer are both Masters or both Slaves. To minimize such risks, please take special care when changing this setting. • The connection box in Section 2.3 Connection box (optional) can be used only when the lidar is in **Slave** mode. To change the lidar to **Master** mode: 1. Connect the lidar to a Master host. 2. Change the lidar from Slave mode to Master mode. Connection will be lost. 3. Connect the lidar to a Slave host and the connection will resume.

VLAN

Option(s)	Description
Default: OFF VLAN ID: 1 to 4094	VLAN tagging To enable VLAN tagging, use the same VLAN ID on both the lidar and the host computer. • Connection cannot be made if the lidar and the host computer use different VLAN IDs. • To minimize such risks, the VLAN ID in LidarUtilities in PandarView 2 is an invalid value (0 or 4095) by default. When checking the checkbox, users will be alerted to input a valid VLAN ID; when unchecking the checkbox, the VLAN ID will default to the invalid value (0 or 4095). • Once configured, VLAN ID will not change during firmware upgrades. • When VLAN is enabled, PTP connection will be lost; when VLAN is disabled, PTP connection will automatically recover.

4.1.2 Destination

Destination IPv4 Address

Option(s)	Description	
Any except 0.0.0.0, 127.0.0.1, and the lidar's IPv4 address Default: 255.255.255.255	Communication mode	Destination IP
	Broadcast (default)	255.255.255.255
	Multicast	User-defined
	Unicast	Same as the computer's IPv4 address

Destination Point Cloud UDP Port

Option(s)	Description
Default: 2368	Destination port for Point Cloud Data Packets

Destination Fault Message UDP Port

Option(s)	Description
Default: 2368	Destination port for Fault Message Packets

4.2 Functional settings

EOL (end of line) Mode

Option(s)	Description
Exit EOL Mode (default) Enter EOL Mode	For the 96 channels other than the **near-field-enabled channels** (see Appendix A Channel distribution data), the point cloud data between 4.5 m to 7.2 m will be released under EOL mode to support EOL calibration. This setting is lost at power-off.

Freeze Frames

Option(s)	Description
Get freeze frames	A freeze frame records the lidar's status information when a fault occurs and is used in diagnostic analysis.

Functional Safety Diagnostics Switch

Option(s)	Description
ON (default) OFF	When ON, the lidar outputs Fault Message Packets and freeze frames. • Fault Message Packets are described in the Safety Manual. Please contact Hesai technical support for more information. • Freeze frames: See Freeze Frames in this section.

Reflectivity Mapping

Option(s)	Description	
Linear Mapping (default) Nonlinear Mapping	Linear Mapping	The `Reflectivity` field in Point Cloud Data Packets linearly represents target reflectivity (0 to 255%).
	Nonlinear Mapping	The mapping between the `Reflectivity` field and target reflectivity is nonlinear. This increases the contrast in low-reflectivity areas (see Appendix C Nonlinear reflectivity mapping).

Return Mode

Option(s)	Description
Single Return: • First • Last • Strongest Dual Return: • Last and Strongest (default) • Strongest and First	The current return mode is shown in Point Cloud Data Packets; see the **`Return Mode`** field in Section 3.1.2.4 Tail.

Rotation Direction

Option(s)	Description
Clockwise (default) Counterclockwise	Direction of motor rotation (in the lidar's top view)

Spin Rate

Option(s)	Description
200 RPM (default) 400 RPM	Spin rate of the motor The current spin rate is shown in Point Cloud Data Packets; see the **`Motor Speed`** field in Section 3.1.2.4 Tail.

Sync Angle

Option(s)	Description
Function: OFF (default), ON Sync angle: 29° to 154°	Phase lock angle After enabling this function and specifying a sync angle (i.e. an azimuth), the lidar will rotate to that azimuthal position at the beginning of every full second. Lidar azimuthal position is defined in Section 1.3 Basic structure. Definition of the full second (detailed in Section B.1 Source of absolute time): • When PTP is tracking or locked, the full second is retrieved from the PTP signal. (PPS signal is not required nor used.) • When PTP is frozen or in free run, the full second is defined as the rising edge of the lidar's internal 1 Hz signal. To phase-lock multiple lidar units, connect them to the same clock source and set the same sync angle. These lidar units will rotate to the same azimuthal position at every full second.

Trigger Method

Option(s)	Description
Angle-Based (default) Time-Based	The way laser firings are triggered Angle-based: Lasers fire every 0.1° at 10 Hz (or 0.2° at 20 Hz). Time-based: Lasers fire every 41.666 µs.

UTC Time Format

<table>
<tr><th>Option(s)</th><th>Description</th></tr>
<tr><td>Broken-Down Time
Calendar Time (default)</td><td>Time representation mode of the <code>Date & Time</code> field in Point Cloud Data Packets and Fault Message Packets.

Broken-down time<table><tr><th>Each byte</th><th>Range (decimal)</th></tr><tr><td>Year (current year minus 1900)</td><td>⩾70</td></tr><tr><td>Month</td><td>1 to 12</td></tr><tr><td>Day</td><td>1 to 31</td></tr><tr><td>Hour</td><td>0 to 23</td></tr><tr><td>Minute</td><td>0 to 59</td></tr><tr><td>Second</td><td>0 to 59</td></tr></table>Calendar time (default)<table><tr><td>Byte 0</td><td>Fixed: 0x00</td></tr><tr><td>Bytes 1 to 5</td><td>Number of seconds since the Unix epoch (1970–01–01 00:00:00 UTC)</td></tr></table></td></tr>
</table>

4.3 State settings

Restart

Option(s)	Description
Restart	Afterward, the Start-Up Times in Section 4.6 Operation Statistics increments by 1.

Sleep

Option(s)	Description
Sleep Wake-Up (by hardware)	In Sleep mode: • The motor stops running. • The lasers stop firing. • No communication exists between the lidar and other devices. • Power consumption is approximately 40 mW. • The time when the lidar is waked up is also recorded as the start-up time; the Start-Up Times in Section 4.6 Operation Statistics increments by 1.

To enter Sleep mode

Use the PTC command 0xAB; see the TCP API Reference Manual.

- For a lidar in **Slave** mode (see Ethernet Communication Mode): When the PTC command's Return Code = 0x00, the vehicle's domain controller should switch its PHY to Slave mode.
- For a lidar in **Master** mode: When the PTC command's Return Code = 0x00, the lidar will directly enter Sleep mode.
- If Return Code = 0x01, the lidar has failed to enter Sleep mode.

To enter Wake-Up mode

The lidar can only be woken up by hardware:

- For a lidar in **Slave** mode, the vehicle's domain controller should switch its PHY to Master mode.
- For a lidar in **Master** mode, the vehicle's domain controller should:
  a. Switch its PHY to Master mode.
  b. Wait for 500 ms.
  c. Switch its PHY back to Slave mode.

Requirements for the domain controller PHY

To support the Sleep/Wake-Up modes:

- The domain controller PHY should satisfy this test specification:
  OPEN ALLIANCE: Automotive Ethernet ECU Test Specification Layer 1 1000BASE-T1 – Revision 1.0
- The domain controller PHY should satisfy these requirements (as specified in Section 97.5 and Section 97.7 in IEEE Std 802.3bp-2016):
  - Send **Send_S** patterns when in Master mode.
  - Disable auto-negotiation.
  - Support Master-Slave configuration.
- The **Send_S** patterns sent by the domain controller PHY in Master mode should satisfy these requirements:
  - When cable length = 5 m, Vpp > 0.84 V.
  - When cable length = 15 m, Vpp > 0.92 V.
- The domain controller PHY in Slave mode should by default NOT send **Send_T** patterns, i.e., the TC10 WUP (wake up pattern) signal.

Standby Mode

Option(s)	Description
In Operation (default) Standby	In Standby mode: • The motor stops running. • The lasers stop firing. • No point cloud output. • The diagnostic functions that are not related to either motor rotation or laser firing remain normal.

4.4 Time sync

Read-only parameter	Description	
PTP Status	Free Run	No PTP master is selected.
	Tracking	Attempting to sync with the selected PTP master, but the absolute offset exceeds the user-specified limit; see PTP Lock Time Offset in this section.
	Locked	The absolute offset is within the user-specified limit.
	Frozen	The lidar has lost connection to the PTP master and is attempting to recover it. Meanwhile, lidar time will drift from the last synchronized time.

PTP Profile

Option(s)	Description
802.1AS Automotive 802.1AS AUTOSAR (default)	IEEE timing and synchronization standard

PTP Lock Time Offset

Option(s)	Description
1 to 100 µs (integer) Default: 1	Upper limit of the absolute offset between Slave and Master when the lidar is in PTP Locked status; see PTP Status in this section.

PTP Domain Number

Option(s)	Description
0 to 127 (integer) Default: 0	Domain attribute of the local clock

PTP Network Transport

Option(s)	Description
L2	Network transport protocol

Switch Type

Option(s)	Description	
TSN (default) Non-TSN	Type of the network switch	
	TSN	Time Sensitive Network, using Peer-to-Peer delay mechanism
	Non-TSN	Using End-to-End delay mechanism

4.5 Lidar info

Read-only parameter	Description
SN	Serial Number
PN	Part Number, indicating the lidar's hardware version Format: [Lidar Model]-[Configuration]
MAC address	Media access control (MAC) address Format: XX:XX:XX:XX:XX:XX (hexadecimal)
Lidar Model	AT128P

Angle correction file

Option(s)	Description
Get File	The angle correction file of each lidar unit is used to correct the azimuth and elevation of each channel.

4.6 Operation Statistics

Climatic

- Internal Temperature

Electrical

- Lidar Input Current
- Lidar Input Voltage
- Lidar Input Power



The electrical parameters are measured at the lidar's external connector.

Availability

- Start-Up Times
- System Uptime
- Total Operation Time

4.7 Upgrade

Upgrade

Option(s)	Description
Upgrade	Upgrade the lidar's firmware and software.

4.8 Logs

Type of log	Description
Operation Log	Record of lidar operations

5 Maintenance

The lidar's optical window is made of plastic (polycarbonate, PC), similar to the material used for car lamps.

- Do NOT wipe the optical window when it is dry, nor use abrasive cleaners. Doing so can damage the optical coating.
- Do NOT use organic cleaners, which can damage the optical window and even cause cracking.
  - Organic cleaners include but are not limited to tar removers, self-cleaning agents, adhesive removers, coating removers, foam cleaners, iron powder removers for car paint, glass cleaners, thinning agents, de-icers, paint surface treatment agents, alcohol, and vinegar.
  - If organic cleaners may be present when cleaning the equipment or performing related operations, please protect the optical window to prevent any contact with organic cleaners.
- Do NOT apply excessive force to the lidar, as this can damage the optical window.
  - If a pressure washer is used to clean the optical window, make sure the distance between the nozzle and the optical window remains at least 60 cm.
  - Using automatic cleaning devices that are not specifically designed for lidars may pose risks. Please contact Hesai technical support for assessment.
  - Do NOT use sharp objects (such as knives or metal tweezers) or hard brushes (such as stiff nylon brushes or wire brushes) to scratch the optical window cover surface. Such actions may damage the optical window surface, and in severe cases, may cause malfunction.
- After prolonged exposure to strong sunlight and high temperatures, the optical window should NOT be cleaned immediately.
- If snow or ice accumulates on the optical window, do NOT use a pressure washer or ice scraper.
  - A small broom is recommended to remove snow.
  - A solvent-free (i.e., free of organic solvents) ice removal spray is recommended to remove ice; alternatively, wait for the ice to melt by itself.
- Do NOT wax the optical window.

Please regularly check on the optical window, considering your use frequency, storage environment, and climate conditions.

- If foreign objects (such as dust, fingerprints, or oil stains) are found on the optical window, make sure to clean them.
- If corrosive foreign objects (such as insect remains, bird droppings, tree resin, road dust, industrial dust, asphalt, soot particles, and road salt) are found on the optical window, make sure to clean them immediately.

Cleaning procedure

1. Make sure the lidar is powered OFF.
2. Choose an appropriate cleaning agent:
   - For light stains, use room temperature water.
   - For heavier stains, use a mild soap solution (no more than two tablespoons of soap per quart or liter of water).
   - For stubborn stains, use a solvent-free (i.e., free of organic solvents), pH-neutral detergent at room temperature, such as car shampoo.
3. Take a clean soft sponge or anti-static microfiber cloth, dampen it with the chosen cleaning agent, and gently wipe the dirty area on the optical window back and forth.
4. For stubborn stains, cover the dirty area with the dampened sponge or cloth to soften the stains before wiping.
5. Immediately after removing the stains, rinse the optical window with clean water. Then, use a clean soft sponge or microfiber cloth to gently wipe away any remaining liquid (which may contain residual cleaning agents or contaminants).

6 Troubleshooting

If the following procedures cannot solve your problem, please contact Hesai technical support.

Symptoms	Points to check
Indicator light is off on the connection box.	Make sure that the following conditions are met: • The power adapter is properly connected and in good condition. • The connection box is intact. • The input voltage and input current satisfy the requirements in Section 2.3 Connection box (optional). Afterward, power on the lidar again and check if the symptom persists.
Motor is not running.	Make sure that the following conditions are met: • The power adapter is properly connected and in good condition. • The input voltage and input current satisfy the requirements in Section 1.5 Specifications. • The lidar can be accessed using LidarUtilities in PandarView 2 (see Cannot connect to lu). • The lidar is not in standby mode; this can be confirmed using LidarUtilities in PandarView 2 or PTC commands. • If a connection box is used, the connection box is intact. Afterward, power on the lidar again and check if the symptom persists.
Motor is running, but no output data is received, neither by Wireshark nor by PandarView 2.	Make sure that the following conditions are met: • The Ethernet cable is properly connected (by unplugging and plugging again). • Destination IP is correctly set; this can be confirmed using LidarUtilities in PandarView 2 or PTC commands. • Firmware version is correct; this can be confirmed using LidarUtilities in PandarView 2 or PTC commands. • The lidar is emitting laser light; this can be confirmed using an infrared camera, an infrared sensor card, or a phone camera without an IR-cut filter. • If a connection box is used, replace the current Ethernet cable with another cable of at least Cat 6; Cat 7 or higher is recommended. Afterward, power on the lidar again and check if the symptom persists.

Symptoms	Points to check
Output data can be received by Wireshark but not by PandarView 2.	Make sure that the following conditions are met: • Lidar Destination Port is correctly set; this can be confirmed using LidarUtilities in PandarView 2 or PTC commands. • If VLAN is enabled, the computer's VLAN ID should be the same as the lidar's; this can be checked using LidarUtilities in PandarView 2 or PTC commands. • The computer's firewall for public networks is turned off, or PandarView 2 is added to firewall exceptions. • The latest PandarView 2 is installed (see Downloads page of Hesai's official website or contact Hesai technical support). Afterward, power on the lidar again and check if the symptom persists.
The lidar cannot connect to LidarUtilities in PandarView 2.	Make sure that the following conditions are met: • Ethernet cable is properly connected (by unplugging and plugging again). • The lidar's IP is in the same subnet with the computer's (WireShark may be used to check the lidar's IP that broadcasts data packets). • If VLAN is enabled, the computer's VLAN ID should be the same as the lidar's; this can be checked using LidarUtilities in PandarView 2 or PTC commands. Afterward, follow these steps: 1. Restart the computer or connect the lidar to another computer. 2. Power on the lidar again and check if the symptom persists.

Symptoms	Points to check
Point cloud is abnormal, showing obviously misaligned points, flashing points, or incomplete FOV.	Make sure that the following conditions are met: • The lidar's optical window is clean. If not, refer to Section 5 Maintenance for the cleaning method. • The lidar's angle correction file is applied (refer to PandarView 2 User Manual). • Spin Rate is steady; this can be confirmed either by checking the `Motor Speed` field (if available) in Point Cloud Data Packets, or by using LidarUtilities in PandarView 2, PandarView 2 or PTC commands. • The lidar's internal temperature is between -40°C and 110°C; this can be confirmed using LidarUtilities in PandarView 2, PandarView 2 or PTC commands. Afterward, check for packet loss. If no packet is lost yet the point cloud flashes, try these steps: 1. Update PandarView 2 to the latest version (see Downloads page of Hesai's official website or contact Hesai technical support). 2. Restart the computer. If the point cloud is still abnormal, try these steps: 1. Connect the lidar to another computer and another network. 2. Power on again and check if the symptom persists.

Symptoms	Points to check
The number of data packets received is abnormal, indicating missing packets.	Make sure that the following conditions are met: • Spin Rate is steady; this can be confirmed either by checking the `Motor Speed` field (if available) in Point Cloud Data Packets, or by using LidarUtilities in PandarView 2, PandarView 2 or PTC commands. • The lidar's internal temperature is between -40°C and 110°C; this can be confirmed using LidarUtilities in PandarView 2, PandarView 2 or PTC commands. • Ethernet is not overloaded. • No switch is connected to the network (the data transmitted from other devices may cause network congestion and packet loss). Afterward, follow these steps: 1. Connect the computer to no other devices but the lidar and check for packet loss. 2. Power on the lidar again and check if the symptom persists.

Appendix A: Channel distribution data

A.1 Angular position and performance

Notes to the table

Channel number	Counts from 1, top to bottom.
Angular position	Design values of each channel's horizontal (azimuth) angle offset and vertical (elevation) angle. • The accurate values are recorded in this lidar unit's angle correction file. • To analyze point cloud data, refer to Section 3.1.4 Point cloud data analysis method.
Instrumented range	Actual measurement range, confined by the allocated Time of Flight (ToF) for each channel.
Near-field enabled	The 32 channels with **min. instrumented range** = 0.5 m are **near-field-enabled channels**. • All the 128 channels fire laser pulses that detect the far field (> 7.2 m). Additionally, the 32 **near-field-enabled channels** also fire laser pulses that only detect the near field (0.5 to 7.2 m). • The horizontal resolution of near-field measurement is always 0.2° at 10 Hz and 0.4° at 20 Hz.
Max. range @10% reflectivity	Channels 97 to 128 only provide near- and mid-field detection, because these channels typically point to the ground.
Far-field enhanced	Channels 33 to 96 are **far-field-enhanced channels**, able to detect 210 m @10% reflectivity (see data in the **max. range @10% reflectivity**).

Channel No.	Angular position		Instrumented range		Near-field enabled?	Max. range @10% reflectivity	Far-field enhanced?
	Horiz. offset	Vertical	Min	Max			
1	2.4°	12.93°	7.2 m	90 m	-	-	-
2	-0.65°	12.73°	7.2 m	90 m	-	-	-
3	2.4°	12.53°	0.5 m	90 m	YES	-	-
4	-0.65°	12.33°	7.2 m	90 m	-	-	-
5	2.4°	12.13°	7.2 m	90 m	-	-	-
6	-0.65°	11.93°	7.2 m	90 m	-	-	-
7	2.4°	11.73°	0.5 m	90 m	YES	-	-
8	-0.65°	11.53°	7.2m	90 m	-	-	-
9	2.4°	11.33°	7.2 m	90 m	-	-	-
10	-0.65°	11.13°	7.2 m	90 m	-	-	-
11	2.4°	10.93°	0.5 m	90 m	YES	-	-
12	-0.65°	10.73°	7.2 m	90 m	-	-	-
13	2.4°	10.53°	7.2 m	90 m	-	-	-
14	-0.65°	10.33°	7.2 m	90 m	-	-	-
15	2.4°	10.13°	0.5 m	90 m	YES	-	-
16	-0.65°	9.93°	7.2 m	90 m	-	-	-
17	-2.4°	9.73°	7.2 m	90 m	-	-	-
18	0.65°	9.53°	7.2 m	90 m	-	-	-
19	-2.4°	9.33°	0.5 m	90 m	YES	-	-
20	0.65°	9.13°	7.2 m	90 m	-	-	-

Channel No.	Angular position		Instrumented range		Near-field enabled?	Max. range @10% reflectivity	Far-field enhanced?
	Horiz. offset	Vertical	Min	Max			
21	-2.4°	8.93°	7.2 m	90 m	-	-	-
22	0.65°	8.73°	7.2 m	90 m	-	-	-
23	-2.4°	8.53°	0.5 m	90 m	YES	-	-
24	0.65°	8.33°	7.2 m	90 m	-	-	-
25	-2.4°	8.13°	7.2 m	90 m	-	-	-
26	0.65°	7.93°	7.2 m	90 m	-	-	-
27	-2.4°	7.73°	0.5 m	90 m	YES	-	-
28	0.65°	7.53°	7.2 m	90 m	-	-	-
29	-2.4°	7.33°	7.2 m	90 m	-	-	-
30	0.65°	7.13°	7.2 m	90 m	-	-	-
31	-2.4°	6.93°	0.5 m	90 m	YES	-	-
32	0.65°	6.73°	7.2 m	90 m	-	-	-
33	2.4°	6.53°	7.2 m	260 m	-	210 m	YES
34	-0.65°	6.33°	7.2 m	260 m	-	210 m	YES
35	2.4°	6.13°	0.5 m	260 m	YES	210 m	YES
36	-0.65°	5.93°	7.2 m	260 m	-	210 m	YES
37	2.4°	5.73°	7.2 m	260 m	-	210 m	YES
38	-0.65°	5.53°	7.2 m	260 m	-	210 m	YES
39	2.4°	5.33°	0.5 m	260 m	YES	210 m	YES
40	-0.65°	5.13°	7.2 m	260 m	-	210 m	YES

Channel No.	Angular position		Instrumented range		Near-field enabled?	Max. range @10% reflectivity	Far-field enhanced?
	Horiz. offset	Vertical	Min	Max			
41	2.4°	4.93°	7.2 m	260 m	-	210 m	YES
42	-0.65°	4.73°	7.2 m	260 m	-	210 m	YES
43	2.4°	4.53°	0.5 m	260 m	YES	210 m	YES
44	-0.65°	4.33°	7.2 m	260 m	-	210 m	YES
45	2.4°	4.13°	7.2 m	260 m	-	210 m	YES
46	-0.65°	3.93°	7.2 m	260 m	-	210 m	YES
47	2.4°	3.73°	0.5 m	260 m	YES	210 m	YES
48	-0.65°	3.53°	7.2 m	260 m	-	210 m	YES
49	-2.4°	3.33°	7.2 m	260 m	-	210 m	YES
50	0.65°	3.13°	7.2 m	260 m	-	210 m	YES
51	-2.4°	2.93°	0.5 m	260 m	YES	210 m	YES
52	0.65°	2.73°	7.2 m	260 m	-	210 m	YES
53	-2.4°	2.53°	7.2 m	260 m	-	210 m	YES
54	0.65°	2.33°	7.2 m	260 m	-	210 m	YES
55	-2.4°	2.13°	0.5 m	260 m	YES	210 m	YES
56	0.65°	1.93°	7.2 m	260 m	-	210 m	YES
57	-2.4°	1.73°	7.2 m	260 m	-	210 m	YES
58	0.65°	1.53°	7.2 m	260 m	-	210 m	YES
59	-2.4°	1.33°	0.5 m	260 m	YES	210 m	YES
60	0.65°	1.13°	7.2 m	260 m	-	210 m	YES

Channel No.	Angular position		Instrumented range		Near-field enabled?	Max. range @10% reflectivity	Far-field enhanced?
	Horiz. offset	Vertical	Min	Max			
61	-2.4°	0.93°	7.2 m	260 m	-	210 m	YES
62	0.65°	0.73°	7.2 m	260 m	-	210 m	YES
63	-2.4°	0.53°	0.5 m	260 m	YES	210 m	YES
64	0.65°	0.33°	7.2 m	260 m	-	210 m	YES
65	2.4°	0.13°	7.2 m	260 m	-	210 m	YES
66	-0.65°	-0.07°	7.2 m	260 m	-	210 m	YES
67	2.4°	-0.27°	0.5 m	260 m	YES	210 m	YES
68	-0.65°	-0.47°	7.2 m	260 m	-	210 m	YES
69	2.4°	-0.67°	7.2 m	260 m	-	210 m	YES
70	-0.65°	-0.87°	7.2 m	260 m	-	210 m	YES
71	2.4°	-1.07°	0.5 m	260 m	YES	210 m	YES
72	-0.65°	-1.27°	7.2 m	260 m	-	210 m	YES
73	2.4°	-1.47°	7.2 m	260 m	-	210 m	YES
74	-0.65°	-1.67°	7.2 m	260 m	-	210 m	YES
75	2.4°	-1.87°	0.5 m	260 m	YES	210 m	YES
76	-0.65°	-2.07°	7.2 m	260 m	-	210 m	YES
77	2.4°	-2.27°	7.2 m	260 m	-	210 m	YES
78	-0.65°	-2.47°	7.2 m	260 m	-	210 m	YES
79	2.4°	-2.67°	0.5 m	260 m	YES	210 m	YES
80	-0.65°	-2.87°	7.2 m	260 m	-	210 m	YES

Channel No.	Angular position		Instrumented range		Near-field enabled?	Max. range @10% reflectivity	Far-field enhanced?
	Horiz. offset	Vertical	Min	Max			
81	-2.4°	-3.07°	7.2 m	260 m	-	210 m	YES
82	0.65°	-3.27°	7.2 m	260 m	-	210 m	YES
83	-2.4°	-3.47°	0.5 m	260 m	YES	210 m	YES
84	0.65°	-3.67°	7.2 m	260 m	-	210 m	YES
85	-2.4°	-3.87°	7.2 m	260 m	-	210 m	YES
86	0.65°	-4.07°	7.2 m	260 m	-	210 m	YES
87	-2.4°	-4.27°	0.5 m	260 m	YES	210 m	YES
88	0.65°	-4.47°	7.2 m	260 m	-	210 m	YES
89	-2.4°	-4.67°	7.2 m	260 m	-	210 m	YES
90	0.65°	-4.87°	7.2 m	260 m	-	210 m	YES
91	-2.4°	-5.07°	0.5 m	260 m	YES	210 m	YES
92	0.65°	-5.27°	7.2 m	260 m	-	210 m	YES
93	-2.4°	-5.47°	7.2 m	260 m	-	210 m	YES
94	0.65°	-5.67°	7.2 m	260 m	-	210 m	YES
95	-2.4°	-5.87°	0.5 m	260 m	YES	210 m	YES
96	0.65°	-6.07°	7.2 m	260 m	-	210 m	YES
97	2.4°	-6.27°	7.2 m	90 m	-	-	-
98	-0.65°	-6.47°	7.2 m	90 m	-	-	-
99	2.4°	-6.67°	0.5 m	90 m	YES	-	-
100	-0.65°	-6.87°	7.2 m	90 m	-	-	-

Channel No.	Angular position		Instrumented range		Near-field enabled?	Max. range @10% reflectivity	Far-field enhanced?
	Horiz. offset	Vertical	Min	Max			
101	2.4°	-7.07°	7.2 m	90 m	-	-	-
102	-0.65°	-7.27°	7.2 m	90 m	-	-	-
103	2.4°	-7.47°	0.5 m	90 m	YES	-	-
104	-0.65°	-7.67°	7.2 m	90 m	-	-	-
105	2.4°	-7.87°	7.2 m	90 m	-	-	-
106	-0.65°	-8.07°	7.2 m	90 m	-	-	-
107	2.4°	-8.27°	0.5 m	90 m	YES	-	-
108	-0.65°	-8.47°	7.2 m	90 m	-	-	-
109	2.4°	-8.67°	7.2 m	90 m	-	-	-
110	-0.65°	-8.87°	7.2 m	90 m	-	-	-
111	2.4°	-9.07°	0.5 m	90 m	YES	-	-
112	-0.65°	-9.27°	7.2 m	90 m	-	-	-
113	-2.4°	-9.47°	7.2 m	90 m	-	-	-
114	0.65°	-9.67°	7.2 m	90 m	-	-	-
115	-2.4°	-9.87°	0.5 m	90 m	YES	-	-
116	0.65°	-10.07°	7.2 m	90 m	-	-	-
117	-2.4°	-10.27°	7.2 m	90 m	-	-	-
118	0.65°	-10.47°	7.2 m	90 m	-	-	-
119	-2.4°	-10.67°	0.5 m	90 m	YES	-	-
120	0.65°	-10.87°	7.2 m	90 m	-	-	-

Channel No.	Angular position		Instrumented range		Near-field enabled?	Max. range @10% reflectivity	Far-field enhanced?
	Horiz. offset	Vertical	Min	Max			
121	-2.4°	-11.07°	7.2 m	90 m	-	-	-
122	0.65°	-11.27°	7.2 m	90 m	-	-	-
123	-2.4°	-11.47°	0.5 m	90 m	YES	-	-
124	0.65°	-11.67°	7.2 m	90 m	-	-	-
125	-2.4°	-11.87°	7.2 m	90 m	-	-	-
126	0.65°	-12.07°	7.2 m	90 m	-	-	-
127	-2.4°	-12.27°	0.5 m	90 m	YES	-	-
128	0.65°	-12.47°	7.2 m	90 m	-	-	-

A.2 Angle correction file

Purpose

Each lidar unit has an angle correction file, which contains the corrected horizontal angles (azimuth) and vertical angles (elevation). Such corrections are used for:

- Point cloud data analysis
- Point cloud display in PandarView 2

How to obtain this file

Use one of these ways:

- Send PTC command 0x05; see the TCP API Reference Manual.
- Export the file using PandarView 2; see the PandarView 2 User Manual.
- Ask Hesai technical support or your sales representative.

Data format

See table below.

- To inspect this .dat file, use a hex viewer.
- Byte size of the file: 48 + 8 × M + 368 × N
- Unless otherwise specified, all the multi-byte fields are transmitted in little-endian format.

Field	Byte(s)	Type	Description
Beginning of File	1	uint	0xEE
Beginning of File	1	uint	0xFF
Protocol Version Major	1	uint	Main class of the angle correction data structure Current value: 0x01
Protocol Version Minor	1	uint	Subclass of the angle correction data structure Current value: 0x05

Field	Byte(s)	Type	Description
Channel Number	1	uint	Number of channels N Always 0x80 (128 channels)
Mirror Number	1	uint	Number of mirrors **M** 0x03 (3 mirror surfaces)
Frame Number	1	uint	Frame number F for every 360° rotation Default: 0x03 (3 frames; each mirror surface corresponds to one frame) This field is only used for PandarView 2 display configuration, not for point cloud data analysis.
Frame Config Byte	8	uint	The first F bytes represent the configuration of F frames, with one byte per frame; the other bytes are not used. Each byte is a bitmap: The first M bits correspond to M mirror surfaces; the other bits are not used. If a bit is set to 1, the measurements from the corresponding mirror surface are output to the byte's corresponding frame; otherwise, the measurements from that mirror surface are not output. See Examples of the Frame Config Byte. This field is only used for PandarView 2 display configuration, not for point cloud data analysis.
Resolution	1	uint	Used in the units of the fields below. Every 0x01 stands for 1°. For example: 0x01 stands for 1° and 0x02 stands for 2°.

Field	Byte(s)	Type	Description
Mirror_Start_Angle[0:M-1]	4 × M	uint32 array	The encoder angle of each mirror surface's starting side Unit: Resolution/25600
Mirror_End_Angle[0:M-1]	4 × M	uint32 array	The encoder angle of each mirror surface's ending side Unit: Resolution/25600 • The range of each mirror surface (`Mirror_End_Angle` – `Mirror_Start_Angle`) * Resolution / 25600 ≈ 120° • One mirror surface's Mirror_End_Angle is exactly the next mirror surface's Mirror_Start_Angle, and so on. • Sum of the three mirror surface ranges = 360°
Azimuth_Offset[0:N-1]	4 × N	int32 array	Each channel's horizontal angle offset; irrelevant to mirror rotation Unit: Resolution/25600
Elevation[0:N-1]	4 × N	int32 array	Each channel's vertical angle offset; irrelevant to mirror rotation Unit: Resolution/25600
Azimuth_Adjust[0:23040-1]	23040 (N × 180)	int8 array	Each channel's horizontal angle adjustments for every 2° encoder angle; relevant to mirror rotation Format: 2D array [128][180] • The 128 rows correspond to Channels 1 to 128. • The 180 columns correspond to encoder angle positions 0°, 2°, 4°, ⋯, and 358°. Unit: Resolution × 0.01

Field	Byte(s)	Type	Description
Elevation_Adjust[0:23040-1]	23040 (N × 180)	int8 array	Each channel's vertical angle adjustments for every 2° encoder angle; relevant to mirror rotation Format: 2D array [128][180] • The 128 rows correspond to Channels 1 to 128. • The 180 columns correspond to encoder angle positions 0°, 2°, 4°, ⋯, and 358°. Unit: Resolution × 0.01
SHA-256 Value	32	uint	SHA-256 hash of this angle correction file

Examples of the Frame Config Byte

Frame number F	First F bytes of `Frame Config Byte`	Description
F = 3	0000 0001, 0000 0010, 0000 0100	• The measurements from Mirror Surfaces 0/1/2 are output to Frames 0/1/2, respectively. • The frames are not stitched.
F = 1	0000 0111	• The measurements from Mirror Surfaces 0/1/2 are output to one frame. • Every three frames are stitched as one. • The frame rate is 1/3 of that in the previous case, while the data points per frame are three times that of the previous case.
F = 1	0000 0000	• The measurements from Mirror Surfaces 0/1/2 are output to one frame according to their encoder angles in Point Cloud Data Packets. • No angle correction is performed.

A.3 Angle correction calculation

A.3.1 Horizontal angle of the current firing channel

$$h_{angle} = (\frac{\alpha}{100} + \frac{\alpha_{fine}}{25600} - \frac{Mirror_Start_Angle\,(frame_id)}{Angle_Division}) \times 2 - \frac{\alpha_{offset}(channel_id)}{Angle_Division} + \frac{\alpha_{adjust}(channel_id,\ azimuth_id)}{Adjust_Angle_Division}$$

Encoder angle of each mirror surface's starting side (Mirror_Start_Angle)	See angle correction file.
Each channel's horizontal angle offset (α_{offset})	See angle correction file.
Each channel's horizontal angle adjustments for every 2° encoder angle (α_{adjust})	See angle correction file.
Unit: (resolution)	See angle correction file.
Encoder angle of the current data block (low-resolution part α and high-resolution part α_{fine})	See **`Azimuth 1`** and **`Fine Azimuth 1`** in Section 3.1.2.3 Body.

A.3.2 Vertical angle of the current firing channel

$$v_{angle} = \frac{\varepsilon(channel_id) \times resolution}{25600} + \frac{\varepsilon_{adjust}(channel_id,\ azimuth_id) \times resolution}{100}$$

Each channel's vertical angle (ε)	See angle correction file.
Each channel's vertical angle adjustments for every 2° encoder angle (ε_{adjust})	See angle correction file.

If the encoder angle (α) is not divisible by 2°, the horizontal angle adjustments (α_{adjust}) and vertical angle adjustments (ε_{adjust}) should be linearly interpolated. For example:

- If the α_{adjust} for 50° and 52° encoder angles are a and b, respectively, then at the 51° encoder angle position, α_{adjust} = (a + b)/2.
- If the ε_{adjust} for 50° and 52° encoder angles are c and d, respectively, then at the 50.5° encoder angle position, ε_{adjust} = (3c + d)/4.

Appendix B: Absolute time of point cloud data

B.1 Source of absolute time

The lidar retrieves the current absolute time by connecting to an external clock source.

B.1.1 PTP as the clock source

The lidar connects to a third-party PTP master to obtain PTP signal.

- PPS signal is not required nor used.
- PTP can be configured using LidarUtilities in PandarView 2 or PTC commands.
- The status of PTP signal can be found using LidarUtilities in PandarView 2 or PTC commands.

The absolute time is updated as follows:

PTP status	Date and time (accurate to the microsecond)	Lidar behavior
Free run	Virtual	Because the lidar has not been locked before, it starts counting from **a virtual UTC** using the lidar's internal 1 Hz signal.
Tracking or Locked	Synchronized	The lidar extracts the actual date and time from the PTP master's messages.
Frozen	Drifting	When the lidar goes from Tracking/Locked to Frozen, it starts counting from **the last synchronized time** using the lidar's internal 1 Hz signal. This absolute time will gradually drift from the actual PTP time.

- PTP is a Plug & Play protocol; the lidar works as a PTP slave device and requires no additional setup.
- The `UTC Fractional Seconds` and `Date & Time` fields in Point Cloud Data Packets strictly follow the PTP master device. Certain PTP master devices may have a specified offset from the lidar's time output. Please verify the configuration and calibration of your PTP master device.

B.2 Absolute time of the Point Cloud Data Packets

The absolute time of a Point Cloud Data Packet is $t_0 = t_s + t_{frac}$, where:

- t_s is the whole second part (see the `Date & Time` field).
- t_{frac} is the microsecond or nanosecond part (see the `UTC Fractional Seconds` field).

The definition of the above fields is in Section 3.1.2.4 Tail.

B.3 Start time of each block

Given the absolute time of this Point Cloud Data Packet as t_0, the start time of each block t(m) can be calculated.

At each t(m), the lidar saves the current azimuth into the current block's Azimuth field in the Point Cloud Data Packet; see Section 3.1.2.3 Body.

(Unit: μs)

Single Return Mode

Block	Start time t(m)
Block 1	t_0 - 9.249 - 41.666 × 2
Block 2	t_0 - 9.249 - 41.666

Dual Return Mode

Block	Start time t(m)
Block 1 & Block 2	t_0 - 9.249 - 41.666

Appendix C: Nonlinear reflectivity mapping

For the `Reflectivity` field in Point Cloud Data Packets, see Section 3.1.2.3 Body.

Nonlinear Mapping increases the contrast in the low-reflectivity region.

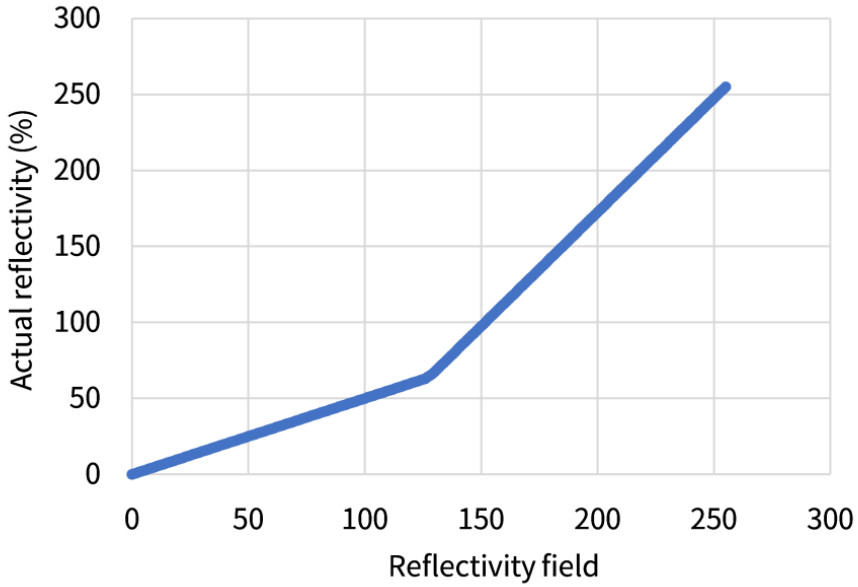

Figure 25. Nonlinear Mapping

Nonlinear Mapping

Reflectivity field	Actual reflectivity %	Reflectivity field	Actual reflectivity %	Reflectivity field	Actual reflectivity %	Reflectivity field	Actual reflectivity %
0	0	1	0.5	2	1	3	1.5
4	2	5	2.5	6	3	7	3.5
8	4	9	4.5	10	5	11	5.5
12	6	13	6.5	14	7	15	7.5
16	8	17	8.5	18	9	19	9.5
20	10	21	10.5	22	11	23	11.5
24	12	25	12.5	26	13	27	13.5
28	14	29	14.5	30	15	31	15.5
32	16	33	16.5	34	17	35	17.5
36	18	37	18.5	38	19	39	19.5
40	20	41	20.5	42	21	43	21.5
44	22	45	22.5	46	23	47	23.5
48	24	49	24.5	50	25	51	25.5
52	26	53	26.5	54	27	55	27.5
56	28	57	28.5	58	29	59	29.5
60	30	61	30.5	62	31	63	31.5
64	32	65	32.5	66	33	67	33.5
68	34	69	34.5	70	35	71	35.5
72	36	73	36.5	74	37	75	37.5

Reflectivity field	Actual reflectivity %	Reflectivity field	Actual reflectivity %	Reflectivity field	Actual reflectivity %	Reflectivity field	Actual reflectivity %
76	38	77	38.5	78	39	79	39.5
80	40	81	40.5	82	41	83	41.5
84	42	85	42.5	86	43	87	43.5
88	44	89	44.5	90	45	91	45.5
92	46	93	46.5	94	47	95	47.5
96	48	97	48.5	98	49	99	49.5
100	50	101	50.5	102	51	103	51.5
104	52	105	52.5	106	53	107	53.5
108	54	109	54.5	110	55	111	55.5
112	56	113	56.5	114	57	115	57.5
116	58	117	58.5	118	59	119	59.5
120	60	121	60.5	122	61	123	61.5
124	62	125	62.5	126	63	127	64
128	65	129	66	130	67.5	131	69
132	70.5	133	72	134	73.5	135	75
136	76.5	137	78	138	79.5	139	81
140	82.5	141	84	142	85.5	143	87
144	88.5	145	90	146	91.5	147	93
148	94.5	149	96	150	97.5	151	99
152	100.5	153	102	154	103.5	155	105

Reflectivity field	Actual reflectivity %	Reflectivity field	Actual reflectivity %	Reflectivity field	Actual reflectivity %	Reflectivity field	Actual reflectivity %
156	106.5	157	108	158	109.5	159	111
160	112.5	161	114	162	115.5	163	117
164	118.5	165	120	166	121.5	167	123
168	124.5	169	126	170	127.5	171	129
172	130.5	173	132	174	133.5	175	135
176	136.5	177	138	178	139.5	179	141
180	142.5	181	144	182	145.5	183	147
184	148.5	185	150	186	151.5	187	153
188	154.5	189	156	190	157.5	191	159
192	160.5	193	162	194	163.5	195	165
196	166.5	197	168	198	169.5	199	171
200	172.5	201	174	202	175.5	203	177
204	178.5	205	180	206	181.5	207	183
208	184.5	209	186	210	187.5	211	189
212	190.5	213	192	214	193.5	215	195
216	196.5	217	198	218	199.5	219	201
220	202.5	221	204	222	205.5	223	207
224	208.5	225	210	226	211.5	227	213
228	214.5	229	216	230	217.5	231	219
232	220.5	233	222	234	223.5	235	225

Reflectivity field	Actual reflectivity %	Reflectivity field	Actual reflectivity %	Reflectivity field	Actual reflectivity %	Reflectivity field	Actual reflectivity %
236	226.5	237	228	238	229.5	239	231
240	232.5	241	234	242	235.5	243	237
244	238.5	245	240	246	241.5	247	243
248	244.5	249	246	250	247.5	251	249
252	250.5	253	252	254	253.5	255	255

Appendix D: Legal notice

Copyright © 2017-2026 Hesai Technology Co., Ltd.
All rights reserved. Use or reproduction of this manual in parts or its entirety in any form or by any means without the written authorization of Hesai is prohibited.

Hesai Technology makes no representations or warranties, either expressed or implied, with respect to the contents hereof and specifically disclaims any warranties, merchantability, or fitness for any particular purpose. Further, Hesai Technology reserves the right to revise this publication and to make changes from time to time in the contents hereof without obligation to notify any person of such revisions or changes.

HESAI and HESAI logo are registered trademarks of Hesai Technology. All other trademarks, service marks, and company names in this manual or on Hesai's official website are properties of their respective owners.

The software included in this product contains copyright that is registered under Hesai Technology. Any third party is not permitted, except as expressly permitted by the licensor or expressly required by applicable law, to decompile, reverse engineer, disassemble, modify, rent, lease, loan, distribute, sublicense, create derivative works based on the whole or any part of the software.

Hesai Product Warranty Service Manual is on the Warranty Policy page of Hesai's official website: https://www.hesaitech.com/warranty-policy/

Hesai Technology Co., Ltd.

Phone: +86 400 805 1233
Website: www.hesaitech.com
Address: Building A, Haisu Culture Plaza, Shanghai, China

Business Email: info@hesaitech.comService
Email: service@hesaitech.com