HESAI

www.hesaitech.com

# JT16

## 16-Channel Mechanical Lidar
## User Manual

**Classification: C0 (Public)**

**Doc version: J03-en-261010**

# Table of Contents


**■ About this manual** **1**

Access to this manual 1

Technical support 1

Legends and format 1

**■ Safety notice** **2**

Special warnings 2

Operating environment 3

Personnel 5

Installation and operation 5

Repair 9

**1 Introduction** **10**

1.1 Applicability 10

1.2 Operating principle 10

1.3 Basic structure 11

1.4 Channel distribution 12

1.5 Specifications 15

**2 Setup** **18**

2.1 Mechanical installation 18

2.1.1 Exterior dimensions 18

2.1.2 Recommended installation 20

2.1.3 Notes on screw installation 21

2.2 Electrical interface 22

2.2.1 Pin description 23

2.2.2 Cables 26

2.3 Connection box (optional) 27

2.3.1 With Ethernet port 27
2.3.2 Without Ethernet port 34
2.4 Network settings on the host computer (Ethernet communication) 39
2.4.1 In Windows 39
2.4.2 In Ubuntu 41
2.5 Network settings on the host computer (API communication) 44
2.5.1 Check the port numbers of the lidar 44
2.5.2 Check serial port data 47
2.6 Tools 47
**3 Data structure** **48**
3.1 Point Cloud and IMU Data Packets 49
3.1.1 Pre-Header 49
3.1.2 Header 50
3.1.3 Body 51
3.1.4 Tail 55
3.1.5 Point cloud data analysis method 57
3.2 Fault Message Packets 59
**4 Maintenance** **61**
**5 Troubleshooting** **63**
**Appendix A: Channel distribution data** **65**
**Appendix B: Fault codes** **67**
**Appendix C: Legal notice** **69**

# About this manual

Please make sure to read through this user manual before your first use and follow the instructions herein when you operate the product. Failure to comply with the instructions may result in product damage, property loss, personal injuries, and/or a breach of warranty.

## Access to this manual

To obtain the latest version, please do one of the following:

- Contact your sales representative of Hesai.
- Contact Hesai technical support at service@hesaitech.com.

## Technical support

If your question is not addressed in this user manual, please contact us at:

- service@hesaitech.com
- https://www.hesaitech.com/technical-support/
- https://github.com/HesaiTechnology

## Legends and format



**Warnings**: Instructions that must be followed to ensure safe and proper use of the product.



**Notes**: Additional information that may be helpful.

Names of data fields are in monospace font.

For example: `Distance` represents the Distance field.

# Safety notice

- Please make sure to read through this safety notice and follow all the instructions and warnings. Failure to comply with the instructions and warnings may result in product damage, property loss, and/or personal injuries.
- Please check the certification information on the product's nameplate. If an agreement has been made not to present certification information on the nameplate, please follow the agreed-to arrangements.
- If you incorporate this lidar product into your product(s), you are required to provide this user manual (or access to this user manual) to the intended users of your product(s).
- This lidar product is intended as a component of an end product. The end-product supplier is responsible for assessing the risk of use in accordance with applicable standards and informing the intended user of safety-related information.
- Should there be other agreements with specific users, the other agreements shall apply.
- Before using a product, please confirm with Hesai the development maturity of the product in a timely manner. For products still in development, Hesai makes no warranty of non-infringement nor assumes any responsibility for quality assurance.

## Special warnings

### Laser safety

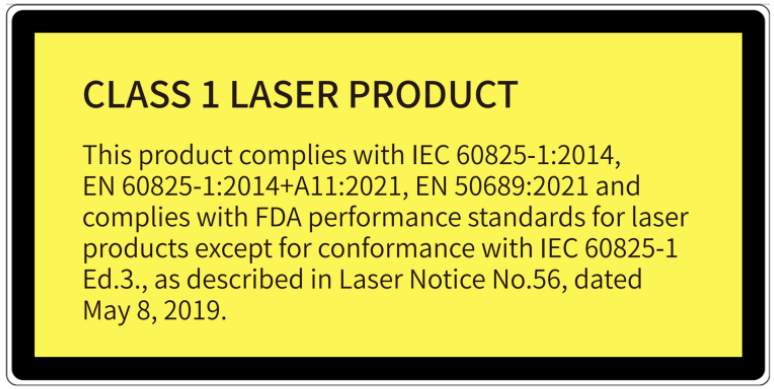

**Hot surface**



**Hot parts!**
Burned fingers when handling the parts.
Wait one-half hour after switching off before handling the parts.

### Abnormalities

In any of the circumstances listed below, stop using the product immediately:

- If you suspect malfunctions of or damage to the product, with symptoms such as noticeable noise or vibration.
- If you or people in the nearby environment feel discomfort.
- If any device or equipment in the nearby environment malfunctions.

Meanwhile, contact Hesai or an authorized Hesai service provider for more information on product disposal.

### Prohibition of disassembly

Unless expressly agreed to in writing by Hesai, do NOT disassemble the product.

## Operating environment

### Radio frequency (RF) interference

- Before using the product, make sure to read all the signs and notices on the product enclosure (including the nameplate). If specific users require not presenting certification information on the nameplate, please follow the agreed-to arrangements.

### Vibration

- If significant mechanical shocks and vibration exist in the product's operating environment, please contact Hesai's technical support to obtain the shock and vibration limits of your product model. Exposure to over-the-limit shocks or vibration may damage the product.
- Make sure to package the product in shock-proof materials to avoid damage during transport.

### Explosive atmosphere and other air conditions

- Do NOT use the product in any area where a potentially explosive atmosphere is present, such as where the air contains high concentrations of flammable chemicals, vapors, or particulates (including particles, dust, and metal powder).
- Do NOT expose the product to environments that have high concentrations of industrial chemicals, including liquefied gases that are easily vaporized (such as helium). Such exposure can damage or impair product functionality.

### Chemical environment

Do NOT expose the product to corrosive or strong polar chemical environments (such as liquids or gases), including but not limited to strong acids, strong bases, esters, and ethers. This is to avoid damage to the product (including but not limited to water resistance failure).

### Ingress protection (IP)

Please check the product's user manual for its IP rating (refer to Section 1.5 Specifications). Make sure to avoid any ingress beyond that rating.

### Operating temperature

Please check the product's user manual for its operating temperature (refer to Section 1.5 Specifications). Make sure not to exceed the operating temperature range.

### Recommended storage conditions

Please store the product in a dry and well-ventilated place. The recommended ambient temperature is 23 ± 5°C, with relative humidity between 30% and 70% RH.

### Light interference

Certain precision optical instruments may interfere with the laser light emitted from the product. Please check all the instructions for these instruments and take preventive measures if necessary. For example, protective leather covers are provided for certain product models; when these lidars are temporarily not used for measurement, the leather covers can be applied to block laser light emission.

## Personnel

### Recommended operator qualifications

The product should be operated by professionals with an engineering background or experience in operating optical, electrical, and mechanical instruments. Always follow the instructions in this manual throughout operation. If needed, please contact Hesai for technical support.

### Medical device interference

- Some components in the product can emit electromagnetic fields. If the product operators or people in the nearby environment wear medical devices (such as cochlear implants, implanted pacemakers, and defibrillators), make sure to consult the physicians and medical device manufacturers for medical advice, such as determining whether a safe distance from the product is required.
- If you suspect that the product is interfering with your medical device, stop using the product immediately.

## Installation and operation

### Power supply

- Before powering on the product, make sure the electrical interfaces are dry and clean. Do NOT power on the product in a humid environment.
- Do NOT use damaged or out-of-spec cables or adapters.
- You are recommended to use only the cables and power adapters provided by Hesai. If you are to design, configure, or select the power supply system (including cables) for the product, make sure to comply with the electrical specifications in the product's user manual (refer to Section 1.5 Specifications and the Power Supply Requirements section if available); for technical support, please contact Hesai.
- Please check Section 2.2 Electrical interface and strictly follow the instructions on plugging/unplugging the connector. If abnormalities already exist (such as bent pins, broken cables, and loose threads), stop using the product and contact Hesai technical support.

### Eye safety

The product is a Class 1 laser product. It satisfies the requirements of:

- IEC 60825-1:2014
- EN 60825-1:2014+A11:2021
- CONSUMER LASER PRODUCT EN 50689:2021
- 21 CFR 1040.10 and 1040.11 except for deviations (IEC 60825-1 Ed.3) pursuant to Laser Notice No.56, dated May 8, 2019.

**CAUTION**: Use of controls or adjustments or performance of procedures other than those specified herein may result in hazardous radiation exposure.

**CAUTION**

- For maximum self-protection, it is strongly warned that users do NOT look into the transmitting laser through a magnifying product (microscope, eye loupe, magnifying glass, etc.).
- This product does not have a power switch. It starts operating once connected to power. During operation, the entire cover lens can be regarded as the product's laser emitting window; looking at the cover lens can be regarded as looking into transmitting laser.

### Product enclosure

- Do NOT crush or puncture the product. If the product enclosure is broken, stop using it immediately and contact Hesai technical support.
- Certain product models contain high-speed rotating parts. To avoid potential injuries, do NOT operate the product if the enclosure is loose.
- If the product enclosure consists of fins or grooves, please wear gloves when handling the product. Applying too much pressure with your bare hands may cause cuts, bruises or other injuries.

### Drops and burns

The product contains metal, glass, and plastic, as well as sensitive electronic components. If the product is dropped or burnt, stop using it immediately and contact Hesai technical support.

### Cover lens

The location of the cover lens is illustrated in Section 1 Introduction.

- Do NOT apply protective film, wax or any other substance on the cover lens.
- To keep the product's cover lens from fingerprints and other stains, do NOT touch the cover lens with bare hands. If the cover lens is already stained, please refer to the cleaning method in Section 4 Maintenance.
- To prevent scratches, do NOT touch the product's cover lens with hard or sharp objects. If scratches already exist, stop using the product and contact Hesai technical support. Severe scratches may affect the quality of the product's point cloud data.

### Mounting

- Before operating the product, make sure it is properly and securely mounted. The mounting should prevent the product from leaving its mounting position under external forces (such as collisions, high winds, and stone impacts).
- If the product is installed in a cavity designed as a wet zone, make sure that no water accumulates in the cavity.
- Before installing any exterior part, please ensure that each exterior part and its movable area do not overlap the Field of View (FOV) of the lidar.

The lidar's FOV is the spatial angular range bounded by the horizontal and vertical FOV ranges (see Section 1.5 Specifications); the distance to the origin of the lidar's coordinate system is not limited. For inquiries about the FOV, please contact Hesai technical support.

### Hot surface

During operation or the time period after the operation, the product's enclosure can be hot.

- To prevent discomfort or even burns, do NOT touch the product's enclosure with your skin.
- To prevent fires, make sure to keep flammable materials away from the product's enclosure.

Certain product models support active heating of the cover lens to reduce the impact of ice and frost.

- While active heating is ON, the cover lens can be hot. To prevent discomfort or even burns, avoid direct skin contact with the cover lens.
- When the cover lens is free of ice and frost, you may turn off active heating.

### Peripherals

The product may be used along with accessories and devices, such as suction cup mounts, extension cables, power supplies, network devices, GNSS/PTP devices, CAN transceivers, and cleaning equipment.

When selecting a peripheral, please refer to all relevant specifications in the product's user manual or contact Hesai technical support. Using out-of-spec or unsuitable devices may result in product damage or even personal injuries.

### Firmware and software upgrading

Make sure to use only the upgrade files provided by Hesai. Make sure to observe all the instructions provided for that upgrade file.

### Customized firmware and software

- Before using a customized version of firmware and software, please fully understand the differences in functions and performance between the customized version and the standard version.
- Make sure to strictly follow all the instructions and safety precautions provided for that customized version. If the product does not function as anticipated, stop using the product immediately and contact Hesai technical support.

**Point cloud data processing**

- Certain product models support one or more point cloud data processing functions, including but not limited to: Noise Filtering, Interstitial Points Filtering, Retro Multi-Reflection Filtering, and Nonlinear Reflectivity Mapping.
- These functions are configurable and are intended only to assist the user in extracting information from the point cloud data. Users are in full control of whether to use any of these functions. Moreover, users are responsible for analyzing the product's intended application scenarios and evaluating the risk of enabling one or more of these functions in combination.
- To learn about the supported functions of a product model, please contact Hesai technical support.

# Repair

- Unless expressly agreed to in writing by Hesai, do NOT disassemble, repair, modify, or alter the product by yourself or through any third party. Such a breach:
  - can result in product damage (including but not limited to water resistance failure), property loss, and/or injuries;
  - shall constitute a breach of warranty.
- For more product repair issues, please contact Hesai or an authorized Hesai service provider.

# 1 Introduction

## 1.1 Applicability

This manual applies to the following versions:

| | |
|---|---|
| Software | APP: 00.B0.C / PBL: 12.BF.B0.00.B0.1 or later |
| Firmware | 1.00c243 or later |

## 1.2 Operating principle

Distance measurement: Time of Flight (ToF)

1. A laser diode emits a beam of ultrashort laser pulses onto the target object.
2. The laser pulses are reflected after hitting the target object. The returning beam is detected by an optical sensor.
3. Distance to the object can be accurately measured by calculating the time between laser emission and receipt.

| | |
|---|---|
| $d = \frac{ct}{2}$ | d: Distance<br>c: Speed of light<br>t: Travel time of the laser beam |

# 1.3 Basic structure

The basic structure is in Figure 1.
Multiple pairs of laser emitters and receivers are attached to a motor that rotates 360° horizontally.

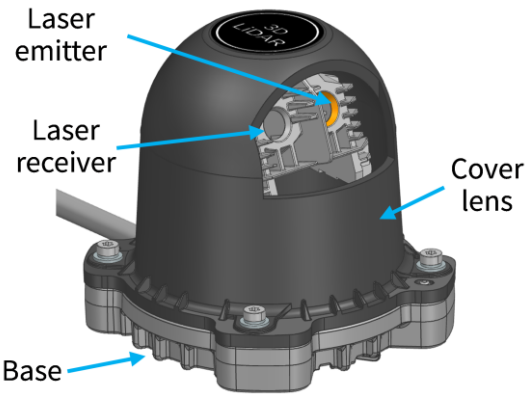


Figure 1. Partial cross-sectional diagram

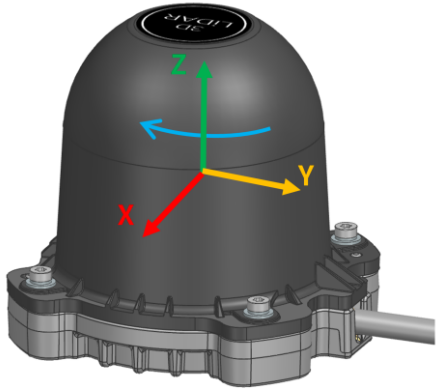


Figure 2. Coordinate system (axonometric view)

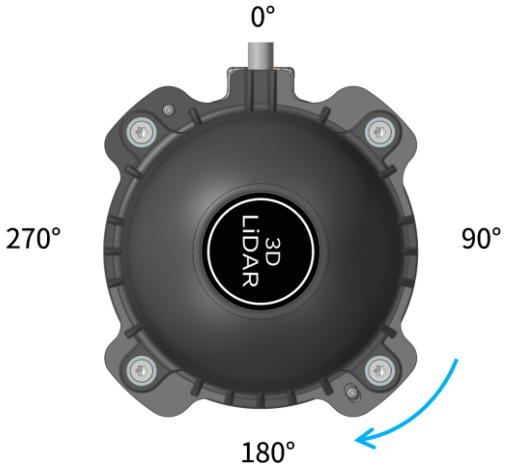


Figure 3. Lidar azimuthal position (top view)

The lidar's coordinate system is illustrated in Figure 2. Z-axis is the axis of rotation.

The lidar's azimuthal position is defined in Figure 3.

- By default, the lidar rotates clockwise in the top view.
- Y-axis corresponds to 0°.
- Each laser channel has an intrinsic azimuth offset. The horizontal center of the emitter-receiver array defines the lidar's azimuthal position.

For example, when the horizontal center passes the 90° position, the lidar is at the 90° position, and the azimuth of the corresponding data block in the Point Cloud Data Packet is 90°.

# 1.4 Channel distribution

All channels are unevenly distributed, as illustrated in Figure 4.

- The vertical angles indicated in Figure 4 are projections onto the plane; for the design value of each channel's vertical angle in space, see Appendix A Channel distribution data.
- Vertical resolution: See Section 1.5 Specifications.
- Channel number counts from 1, bottom to top.

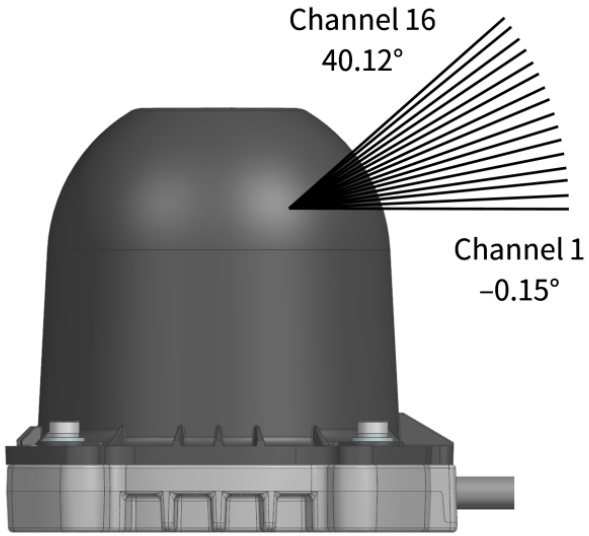


Figure 4. Channel vertical distribution

Each channel has an intrinsic angle offset, both horizontally and vertically. These angles are recorded in this lidar unit's angle correction file.

**Get the angle correction file**

Use one of these ways:

- See the API Reference Manual.
- Export the file using PandarView 2; see the PandarView 2 User Manual.
- Ask Hesai technical support or your sales representative.

In Figure 5:

- The origin of the lidar's coordinate system is marked as a red dot.
- At the 0° azimuthal position, the optical center (also the center of exit diaphragm) is marked as a yellow dot. All measurements are relative to the optical center.

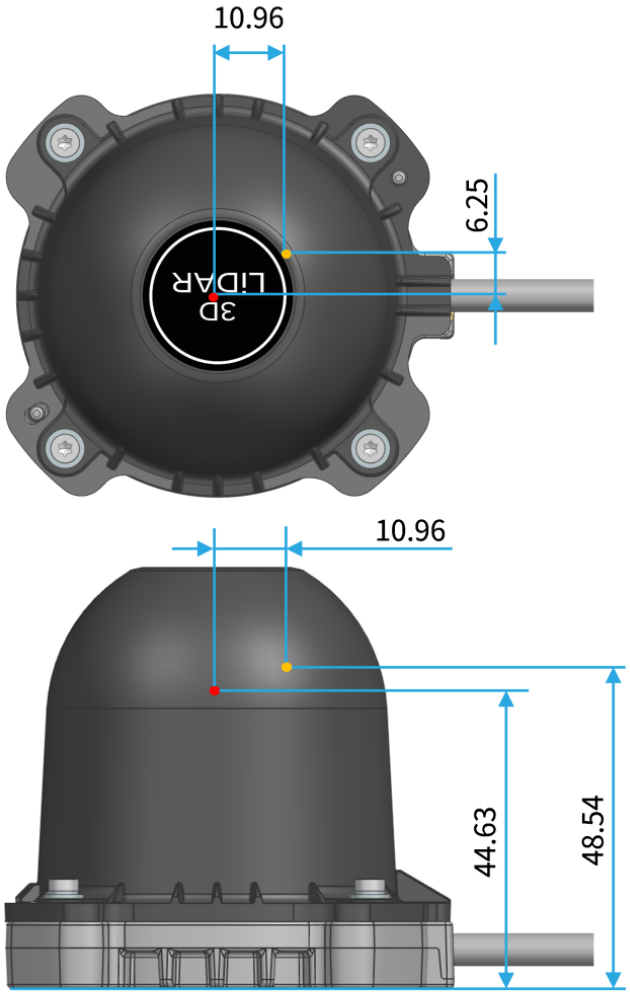


Figure 5. Laser firing position (unit: mm)

# 1.5 Specifications

### SENSOR

| | |
|---|---|
| Scanning method | Mechanical rotation |
| Number of channels | 16 |
| Instrumented range | 0.15 to 100 m |
| Ranging capability ① | 30 m (at 10% reflectivity, for all channels) |
| Ranging precision | 3 cm (typical, 1σ) |
| Ranging accuracy | ±3 cm (typical) |
| Horizontal FOV | 360° |
| Horizontal resolution | 0.6° (5 Hz)<br>1.2° (10 Hz) |
| Vertical FOV | 40° (0° to 40°) |
| Vertical resolution | 2.67° (average) |
| Frame rate | 5/10 Hz |
| Return mode | **Single return:** Last/Strongest (default) |

### MECHANICAL/ELECTRICAL/OPERATIONAL

| | |
|---|---|
| Wavelength | 905 nm |
| Laser class | Class 1 Eye Safe |
| Ingress protection | IP6K6 |
| Dimensions | Height: 64 mm<br>Bottom: Φ 61.53/75.5 mm |

| | |
|---|---|
| Rated voltage range | DC 12 to 16 V |
| Power consumption ② | 4.3 W |
| Operating temperature ③ | -20°C to 55°C |
| Storage temperature ③ | -40°C to 70°C |
| Weight | ＜200 g |

**DATA I/O**

| | |
|---|---|
| Data transmission ④ | • API: RS485 (3000000 8-N-1)<br>• Ethernet: Standard 100BASE-TX |
| Measurements | Distance, azimuth, and reflectivity |
| Valid point rate | 48 000 pts/sec |
| Point cloud data rate ⑤ | 1.92 Mbps |

Specifications are subject to change. Please refer to the latest version of this manual.

**Notes to specifications**

| | |
|---|---|
| ① **Ranging capability** | Test conditions: normal incidence, 0 to 100 klx ambient illuminance, 50% probability of detection (PoD) |
| ② **Power consumption** | • Typical value, not including accessories such as the connection box<br>• Test conditions: 14V, room temperature, frame rate 5 Hz<br>• The external power supply: 1.4 A, 16 W |
| ③ **Operating temperature and storage temperature** | • Both refer to ambient air temperature.<br>• During operation, the lidar's surface and internal temperatures may exceed the ambient air temperature. |
| ④ **Data transmission** | Software versions and Baud rates: |

| | |
|---|---|
| ⑤ **Point cloud data rate** | • **00.B0.1** or **00.B0.5**: 3125000<br>• Otherwise: 3000000<br>• Given: horizontal FOV (360°), horizontal resolution (0.6° at 5 Hz), frame rate (5 Hz), size of a Point Cloud Data Packet (80 bytes) and the number of blocks in each packet (1).<br>• At 5 Hz, one return is generated for each 0.6° azimuth; thus 600 (360°/0.6°) returns for each frame and 3000 returns (5 frames) per second.<br>• Each Point Cloud Data Packet contains one block, and the block stores one return.<br>• Therefore, 3000/1 = 3000 packets are transmitted per second, totaling 3000 × 80 bytes.<br>• With unit conversion, point cloud data rate = 3000 × 80 × 8 × 1E-6 = 1.92 Mbps. |

# 2 Setup

Before operating the lidar, strip away the protective cover on the cover lens.

The information in this section may be different for customized models. The mechanical drawings and data exclusively provided for customized models shall prevail.

## 2.1 Mechanical installation

### 2.1.1 Exterior dimensions

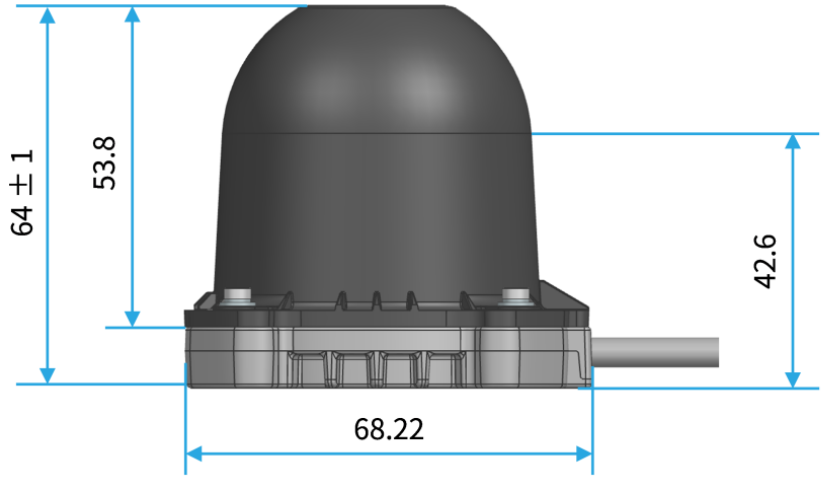


Figure 6. Left side view (unit: mm)

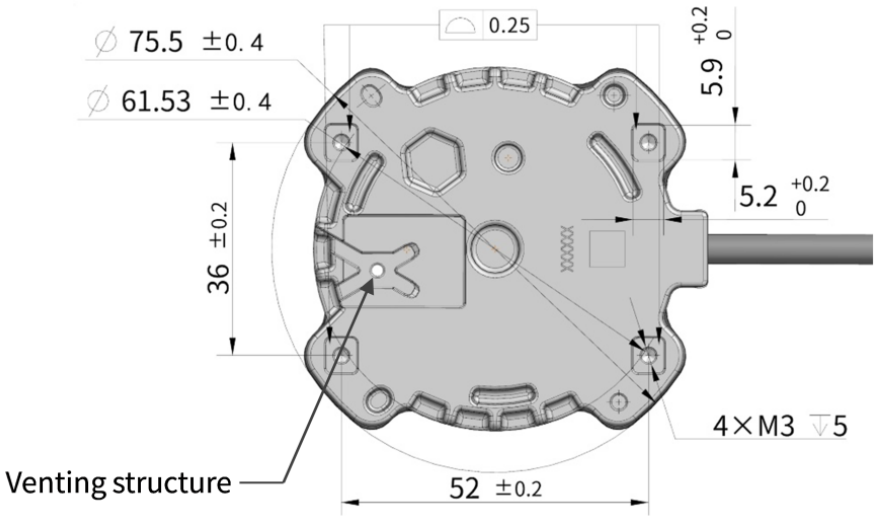


Figure 7. Bottom view (unit: mm)

- Use the four mounting alignment slots on the bottom as the mounting reference surface.
- Recommended installation method: Fully cover the non-optical area (i.e. the cylindrical part at the bottom), and only expose the optical area (i.e. the domed part at the top).
- If other installation methods are used, please contact Hesai technical support.

## 2.1.2 Recommended installation

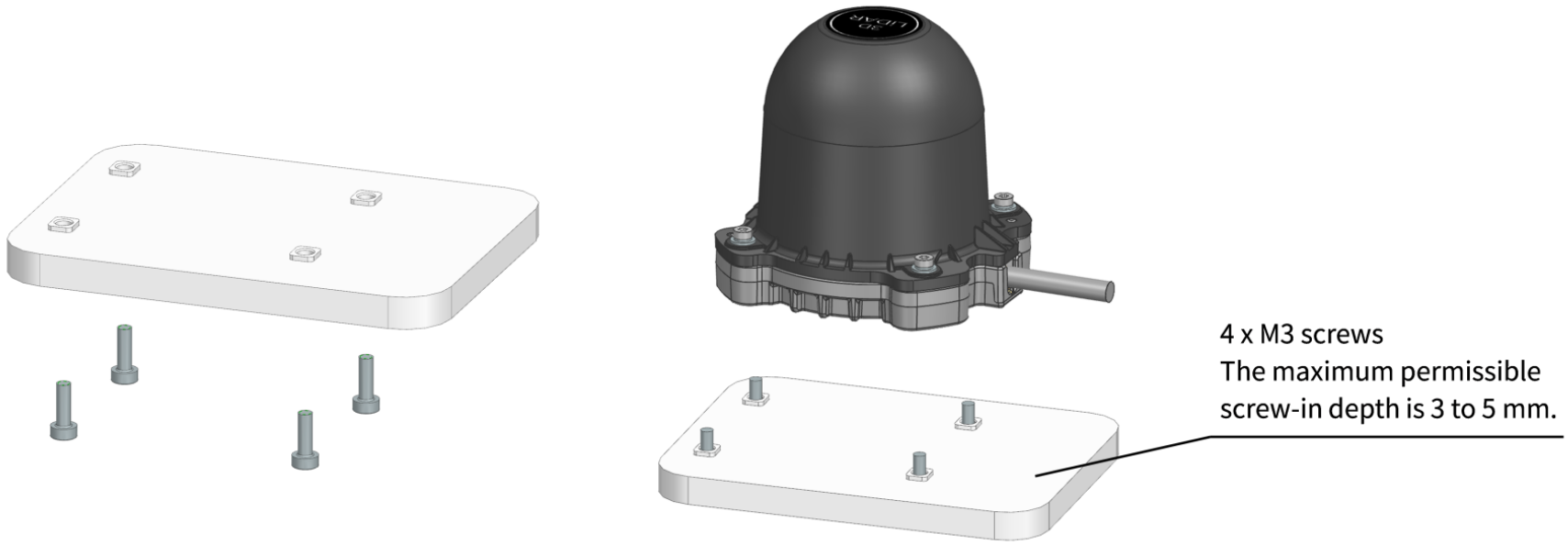


Figure 8. Recommended installation

To maximize data integrity and ESD protection, chassis grounding is strongly recommended:

- Mount the lidar on a properly grounded metal bracket.
- Ensure reliable electrical continuity between the lidar enclosure, the mounting screws, and the bracket.

In installations where chassis grounding is impractical or impossible (e.g., battery-powered or airborne platforms), high-quality shielded twisted pair (STP) Ethernet cables with properly grounded connectors is a recommended alternative.

## 2.1.3 Notes on screw installation

Strictly follow the screw specifications and installation requirements in Figure 8.

**Screw type**

SEMS screws (with pre-attached flat washers and lock washers) are recommended. Property class should be at least 4.8.

**Screw torque**

- The base material of the threaded holes is aluminum alloy, not steel.
- The recommended screw torque: 0.8 to 1 Nm

**Thread service life**

- Ten times. (Each screwing counts as one time, so as each unscrewing.)
- If threadlocker is used, clean the threaded hole before each retightening. Avoid contact between the cover lens and the cleaner.

## 2.2 Electrical interface

JST connector Part Number: PUDP-08V-S (female socket, shown as the blue areas below.)

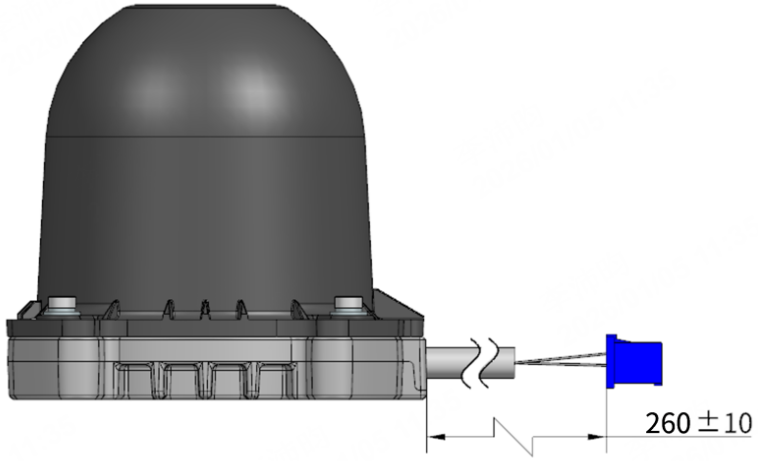


Figure 9. Connector left side view (unit: mm)

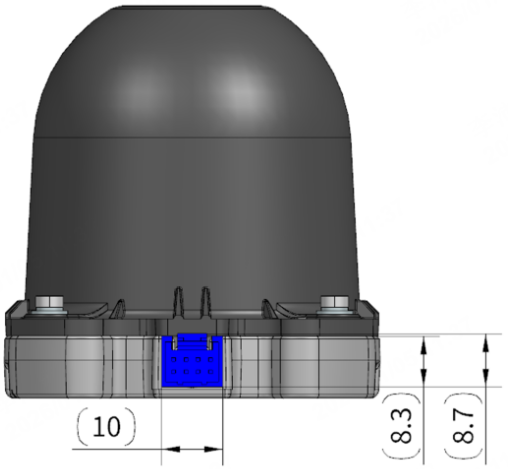


Figure 10. Connector front view (unit: mm)

### 2.2.1 Pin description

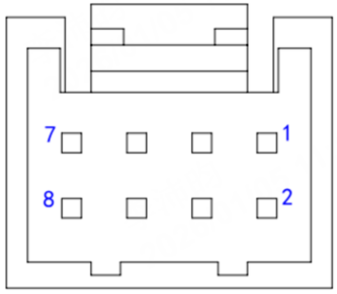


Figure 11. Lidar connector

| No. | Direction | Signal | Wire color | Level | Baud rate | Description |
|---|---|---|---|---|---|---|
| 1 | Input | VCC_14V | Red | 12 to 16 V | - | - |
| 2 | Input | GND | Black | 0 V | - | - |
| 3 | Bidirectional (half duplex) | API_RX/DATA_A | White | RS485 | 3000000 | Input data: Upgrade packages<br>Output data:<br>• Point cloud data and lidar status<br>• API datagrams (ACK) |
| 4 | | API_RX/DATA_B | Green | | | |
| 5 | Input | GNSS_PPS | Blue | 3.3 V CMOS | - | - |
| 6 | Input | API_TX/GNSS_NMEA | Yellow | 3.3 V | 9600 | Input data:<br>• API datagrams (CMD)<br>• GNSS NMEA (GPRMC or GNRMC) |
| 7 | - | Reserved | - | - | - | - |
| 8 | - | Reserved | - | - | - | - |

- The RS485 signals are powered by 3.3 V:
  - Common-mode voltage |Voc| is 1.65 V.
  - Differential voltage |Vod| ranges from 1.3 to 3.3 V.
- Software versions and Baud rates:
  - **00.B0.1** or **00.B0.5**: 3125000
  - Otherwise: 3000000

Avoid touching the reserved wires or ports with bare hands.

**Timing requirements of GNSS signals (PPS and NMEA)**

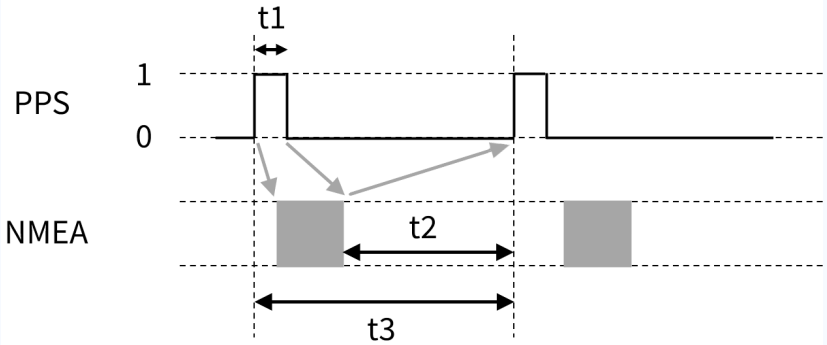


| | |
|---|---|
| Cycle of the PPS signal | t3 = 1 s ± 50 µs (rising edge to rising edge) |
| Pulse width of the PPS signal | t1 ⩾ 1 ms<br>Recommended range: 10 to 100 ms |
| Timing relationship | As indicated by the gray arrows, the NMEA signal:<br>• Should **start** after the PPS **rising** edge of the current second.<br>• Should **end** after the PPS **falling** edge of the current second.<br>• Should **end** before the PPS **rising** edge of the **next** second; t2 ⩾ 500 ms. |

## 2.2.2 Cables

- Users may connect the lidar with or without a connection box.
- Cable between the lidar and the connection box (shown below):
  - Outer diameter (OD): 5 ± 0.20 mm
  - Minimum bend radius: 5 × OD

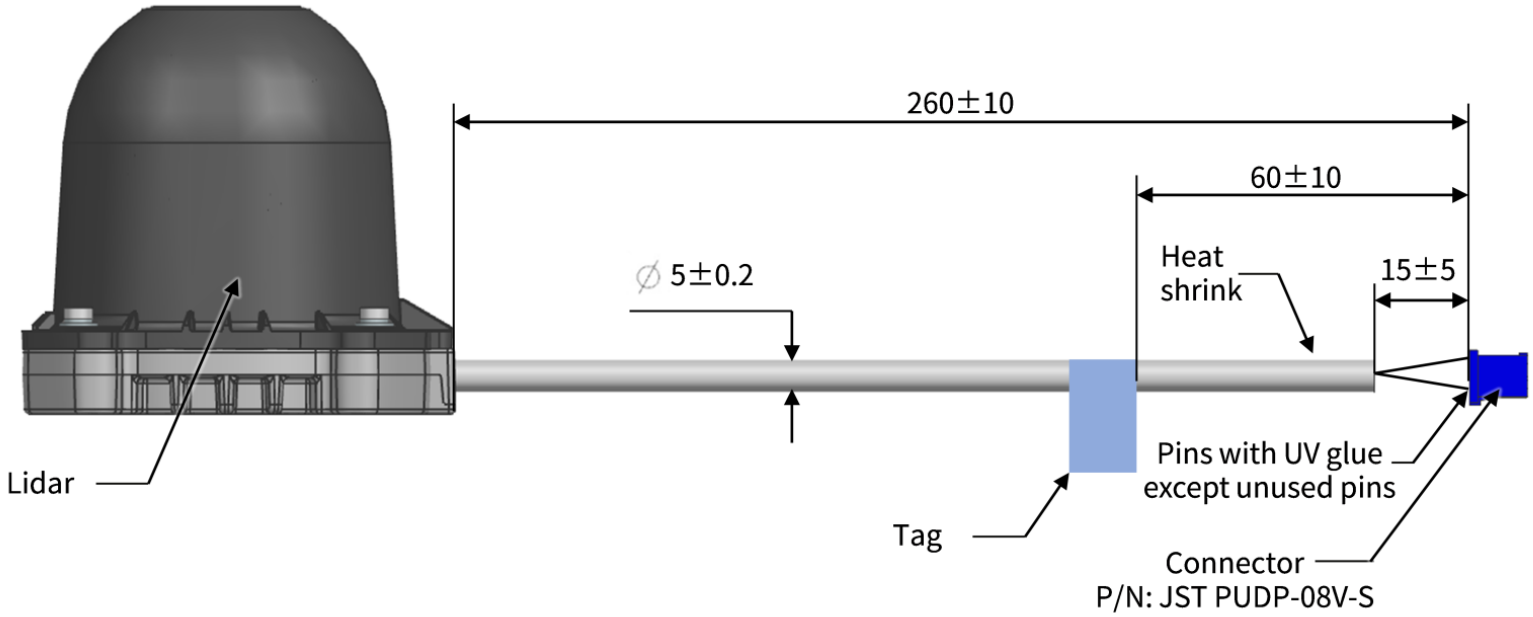


Figure 12. Cable between lidar and connection box (unit: mm)

# 2.3 Connection box (optional)

## 2.3.1 With Ethernet port

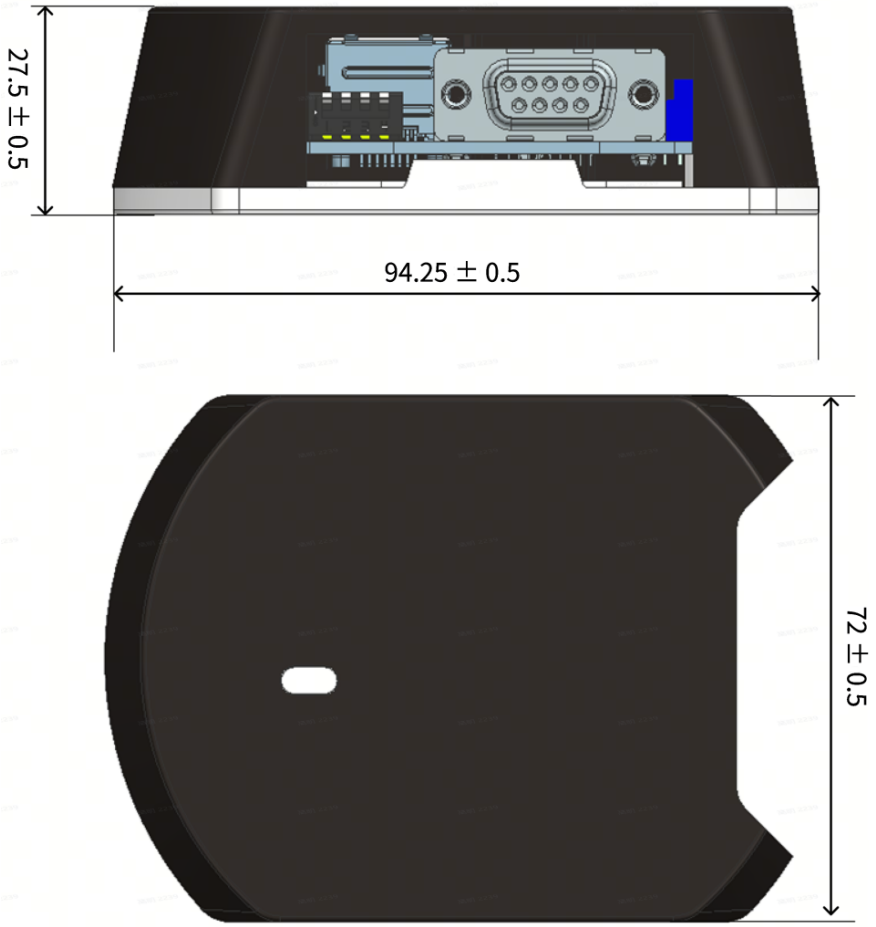


Figure 13. Connection box (unit: mm)

### Ports

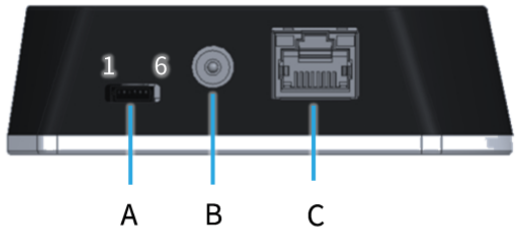


Figure 14. Connection box (front)

| Port number | Connection | Description |
|---|---|---|
| A | Optional | Connect to an external GNSS module; for time synchronization.<br>Connector Part Number: JST SM06B-SRSS-TB<br>Recommended connector for the external GNSS module: JST SHR-06V-S-B |
| B | Mandatory | Connect to a 12 to 16 V DC power source. |
| C | Optional | Connect to the host computer; for Ethernet communication (standard 100BASE-TX). |

Port A (left to right):

| Pin number | Direction | Signal | Level | Description |
|---|---|---|---|---|
| 1 | Input | GNSS_PPS | 3.3 V CMOS | - |
| 2 | Output | GNSS_5V | 5 V | Power for the external GNSS module |
| 3 | - | GND | 0 V | Ground for the external GNSS module |
| 4 | Input | GNSS_NMEA | RS232 | - |
| 5 | - | GND | 0 V | Ground for the external GNSS module |
| 6 | - | Reserved | - | Do NOT connect this pin to external signals. |

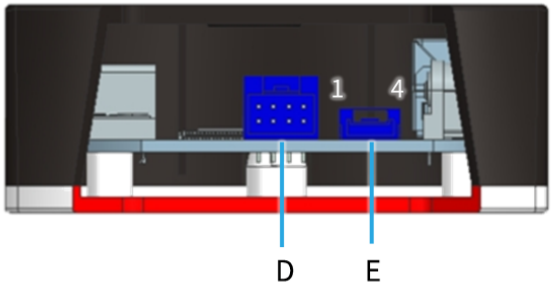


Figure 15. Connection box (left)

| Port number | Connection | Description |
|---|---|---|
| D | Lidar port | Connect to the lidar connector.<br>Connector Part Number: JST S08B-PUDSS-1 |
| E | Optional | Connect to the host computer; for API communication.<br>Connector Part Number: JST SM04B-GHS-TB<br>Recommended connector for the external module: JST GHR-04V-S |

Port A and Port E cannot be used simultaneously.

Port E (left to right):

| Pin number | Direction | Signal | Level | Description |
|---|---|---|---|---|
| 1 | Input | API_TX | 3.3 V CMOS | Use either Pin 1 or Pin 2, not both. |
| 2 | | | | |
| 3 | - | GND | 0 V | Ground |
| 4 | - | GND | 0 V | Ground |

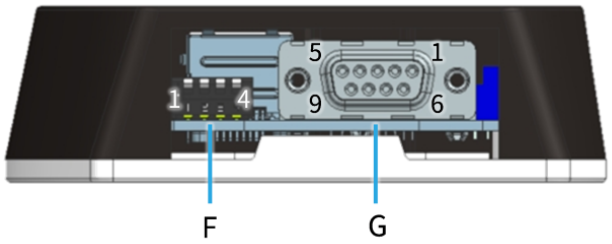


Figure 16. Connection box (back)

| Port number | Connection | Description |
|---|---|---|
| F | - | DIP Switch |
| G | Optional | Connect to the host computer.<br>Connector Part Number: Amphenol LD09S33E4GX00LF |

Port F (left to right):

| Toggle number | Description |
|---|---|
| 1 | Reserved |
| 2 | Reserved |
| 3 | Used to configure the external source of absolute time<br>Up — PTP (802.1AS, 802.1AS AUTOSAR)<br>Down — GNSS<br>• In serial communication mode, the external source of absolute time is fixed to GNSS.<br>• In Ethernet communication mode:<br>◦ This toggle is effective.<br>◦ If no external time source is available, select GNSS (toggle down). |

| Toggle number | Description |
| --- | --- |
| 4 | Used to configure the communication mode<br>Up — Ethernet communication (Port C transmits point cloud data and API commands)<br>Down — Serial communication (Port G transmits point cloud data; Port E API commands)<br>• Port C and Port E cannot be used simultaneously.<br>• When the external source of absolute time is GNSS (see Toggle 3), the lidar cannot transmit API commands, neither via Port C nor Port E. |

Port G (right to left, top to bottom):

| Pin number | Direction | Signal | Level | Description |
| --- | --- | --- | --- | --- |
| 1 | Bidirectional (half duplex) | API_RX/DATA+ | RS485 | - |
| 2 | | API_RX/DATA- | | |
| 5 | - | GND | 0 V | Ground for the external GNSS module |
| 9 | Input | GNSS_5V | 5 V | Power for the external GNSS module |

## Connection

The Lidar's appearance is for reference only. The actual product may vary.

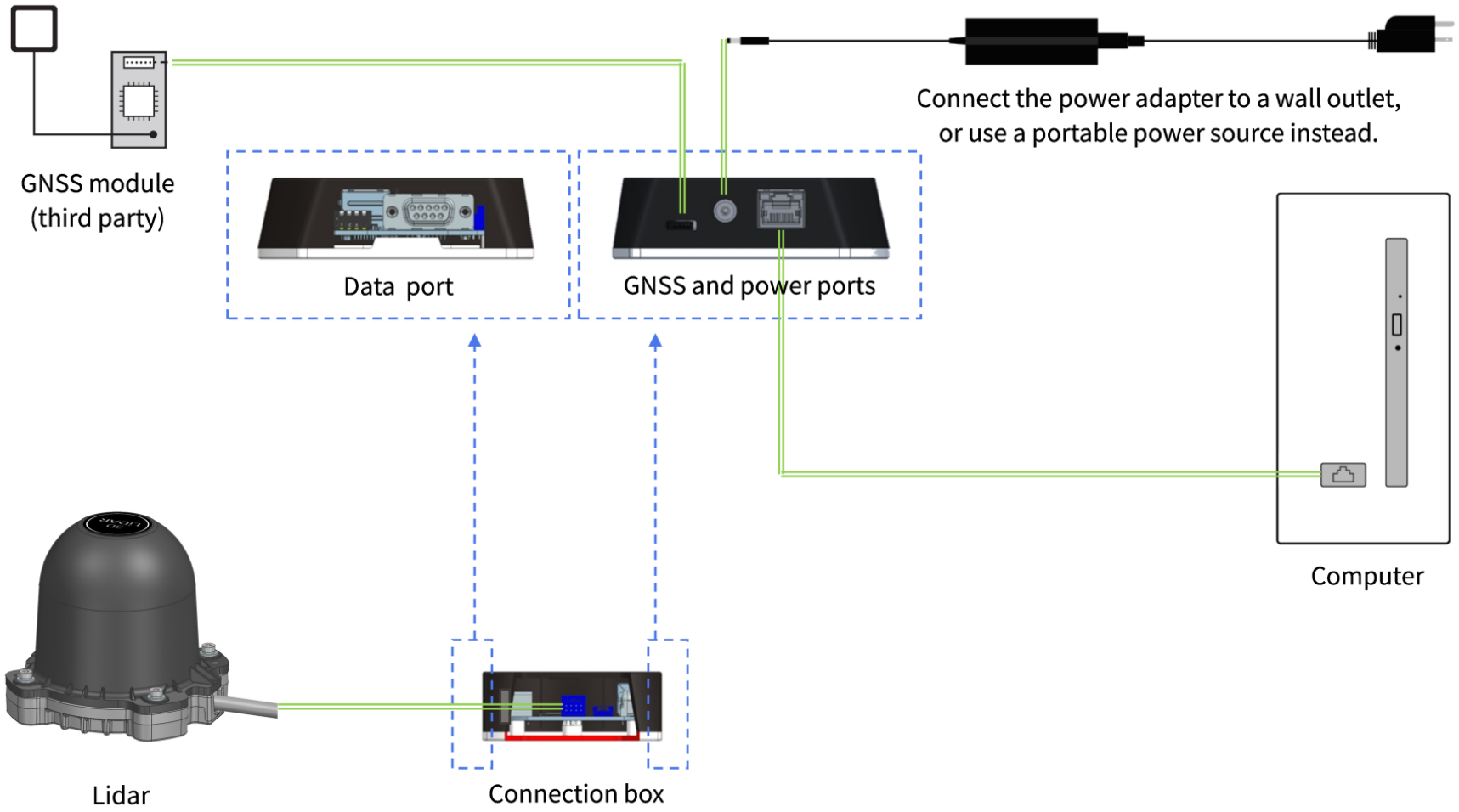


Figure 17. Connection box connection (Ethernet communication)

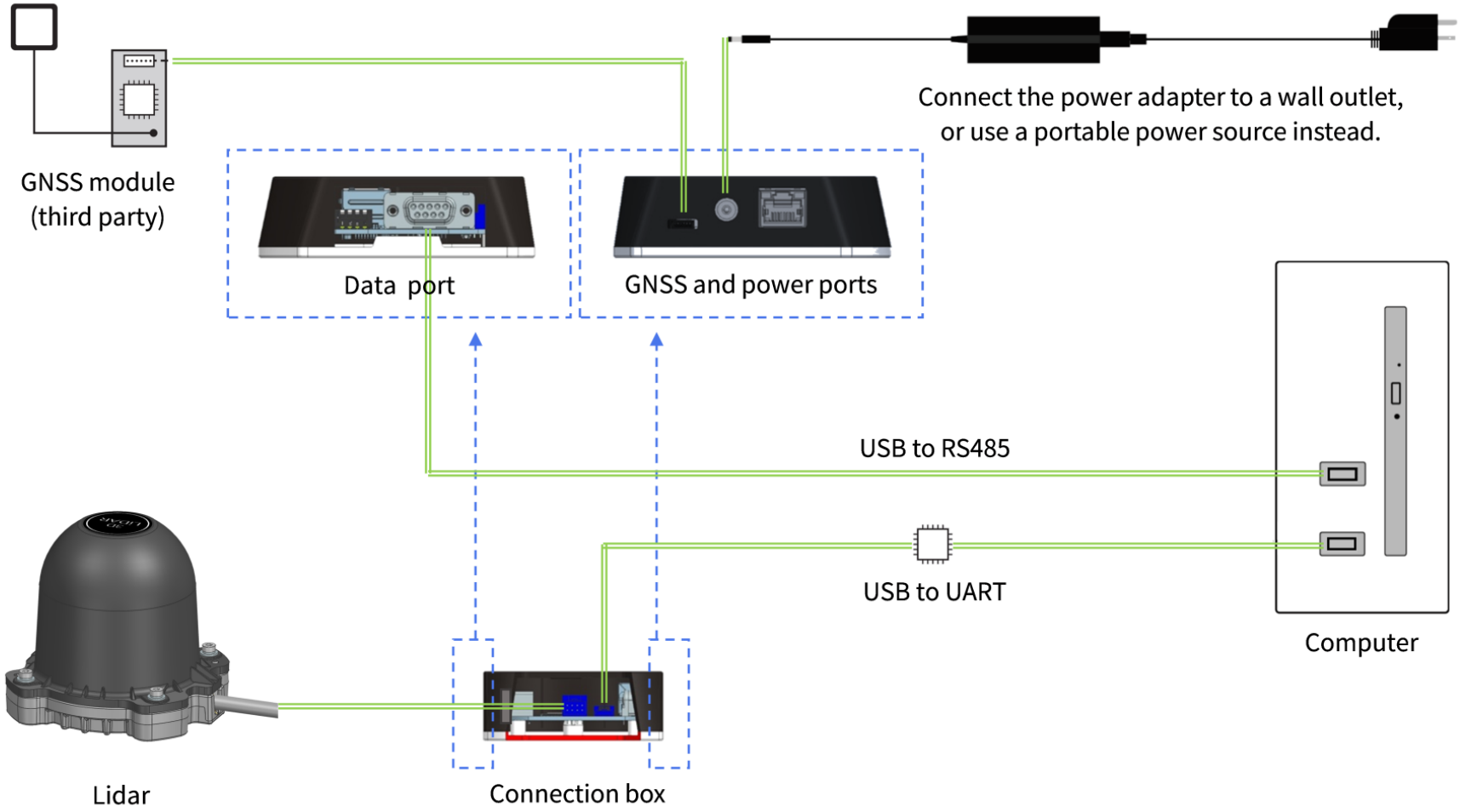


Figure 18. Connection box connection (serial communication)

## 2.3.2 Without Ethernet port

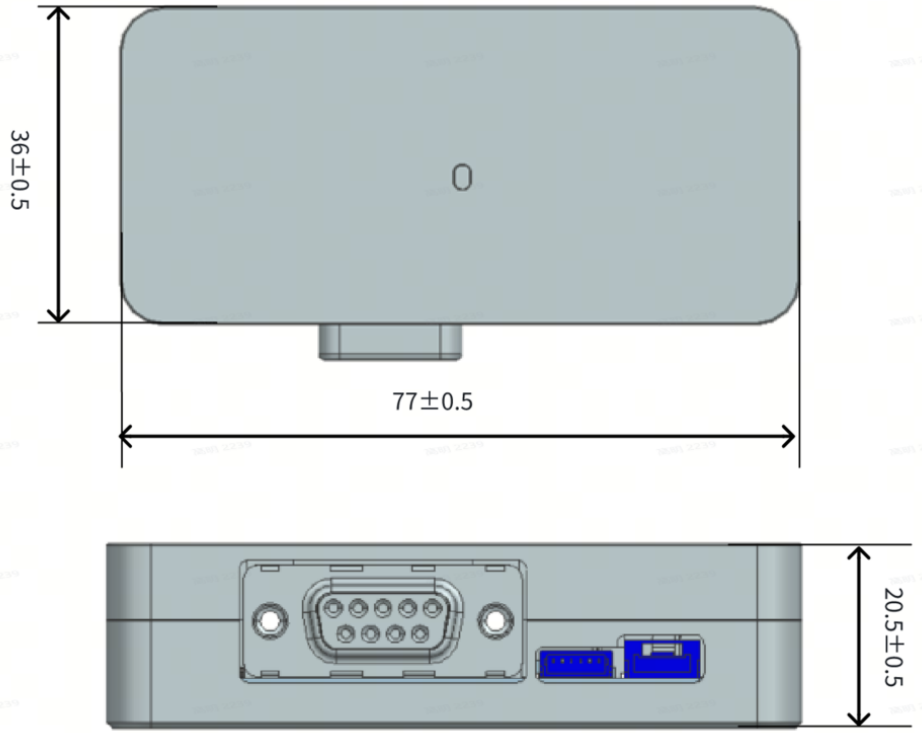


Figure 19. Connection box (unit: mm)

### Ports

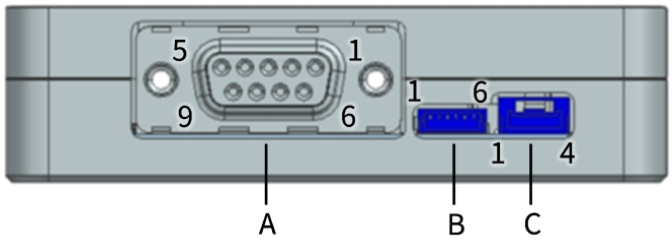


Figure 20. Connection box (front)

| Port number | Connection | Description |
|---|---|---|
| A | Mandatory | Connect to the host computer; for GNSS communication.<br>Connector Part Number: Amphenol LD09S33E4GX00LF |
| B | Optional | Connect to an external GNSS module; for time synchronization.<br>Connector Part Number: JST SM06B-SRSS-TB<br>Recommended connector for the external GNSS module: JST SHR-06V-S-B |
| C | Optional | Connect to the host computer; for API communication.<br>Connector Part Number: JST SM04B-GHS-TB<br>Recommended connector for the external module: JST GHR-04V-S |

- Port B and Port C cannot be used simultaneously.
- When the host computer sends API commands to the lidar, Port C must be connected; in other cases, Port C can be disconnected.

Port A (right to left, top to bottom):

| Pin number | Direction | Signal | Level | Description |
|---|---|---|---|---|
| 1 | Bidirectional (half duplex) | API_RX/DATA+ | RS485 | - |
| 2 | | API_RX/DATA- | | |
| 5 | - | GND | 0 V | Ground for the external GNSS module |
| 9 | Input | GNSS_5V | 5 V | Power for the external GNSS module |

Port B (left to right):

| Pin number | Direction | Signal | Level | Description |
|---|---|---|---|---|
| 1 | Input | GNSS_PPS | 3.3 V CMOS | - |
| 2 | Output | GNSS_5V | 5 V | Power for the external GNSS module |
| 3 | - | GND | 0 V | Ground for the external GNSS module |
| 4 | Input | GNSS_NMEA | RS232 | - |
| 5 | - | GND | 0 V | Ground for the external GNSS module |
| 6 | - | Reserved | - | Do NOT connect this pin to external signals. |

Port C (left to right):

| Pin number | Direction | Signal | Level | Description |
|---|---|---|---|---|
| 1 | Input | API_TX | 3.3 V CMOS | Use either Pin 1 or Pin 2, not both. |
| 2 | | | | |
| 3 | - | GND | 0 V | Ground |
| 4 | - | GND | 0 V | Ground |

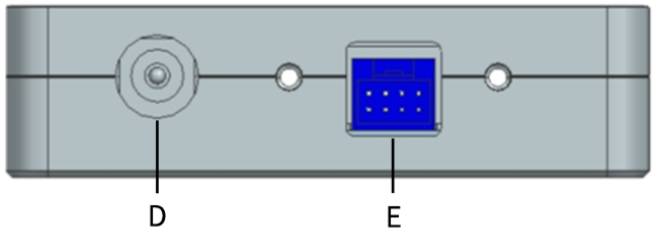


Figure 21. Connection box (back)

| Port number | Port name | Description |
|---|---|---|
| D | Power port | Connect to a 12 to 16 V DC power source. |
| E | Lidar port | Connect to the lidar connector.<br>Connector Part Number: JST S08B-PUDSS-1 |

## Connection

The Lidar's appearance is for reference only. The actual product may vary.

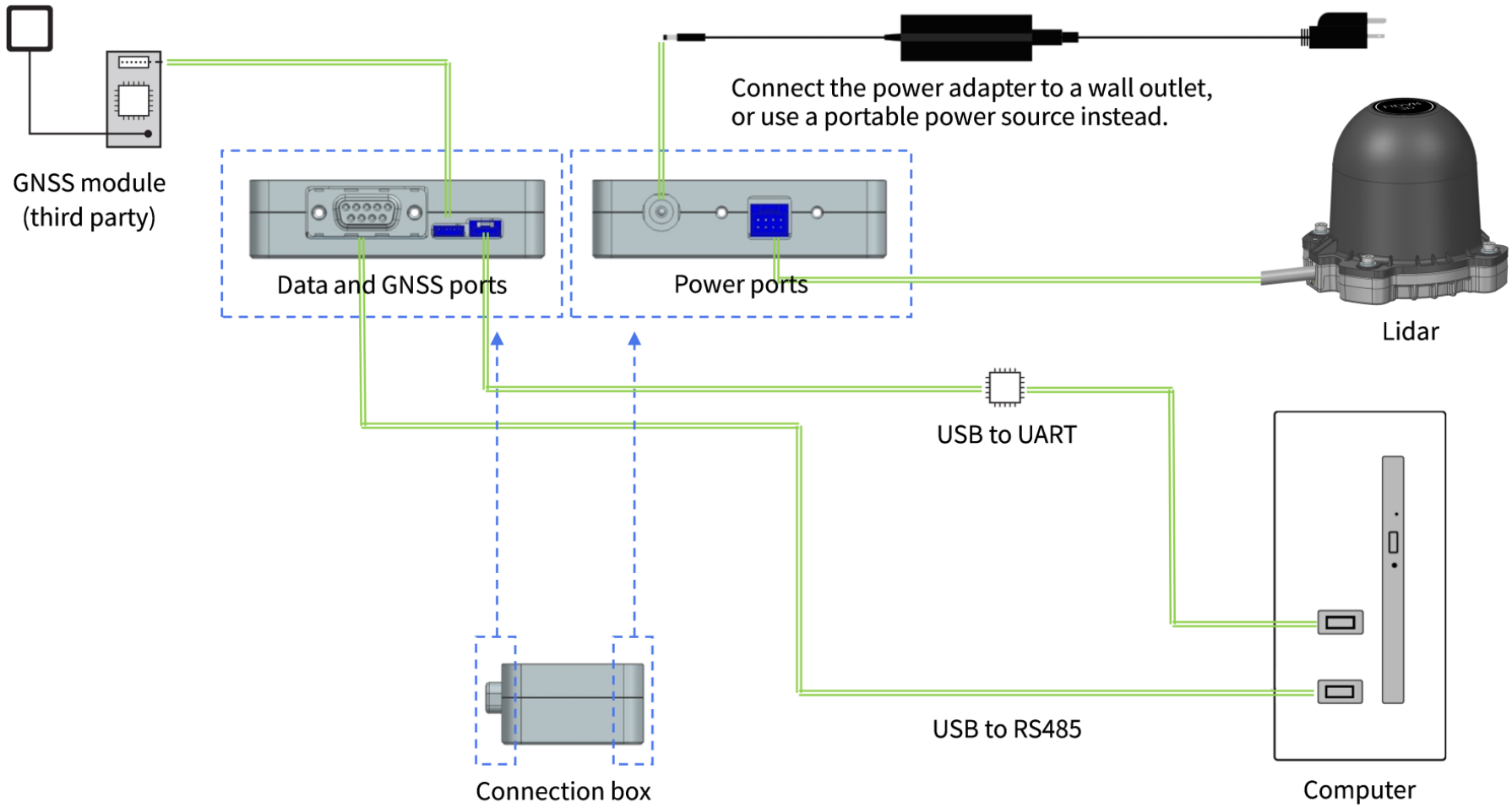


Figure 22. Connection box connection

# 2.4 Network settings on the host computer (Ethernet communication)

## 2.4.1 In Windows

1. **[ Control Panel ]** > **[ Network and Internet ]** > **[ Network and Sharing Center ]** > **[ Change adapter settings ]**.
2. Right-click **[ Ethernet ]** or **[ Ethernet X ]** which shows Ethernet connection (with no red cross at the bottom left of the icon) > Select **[ Properties ]**.

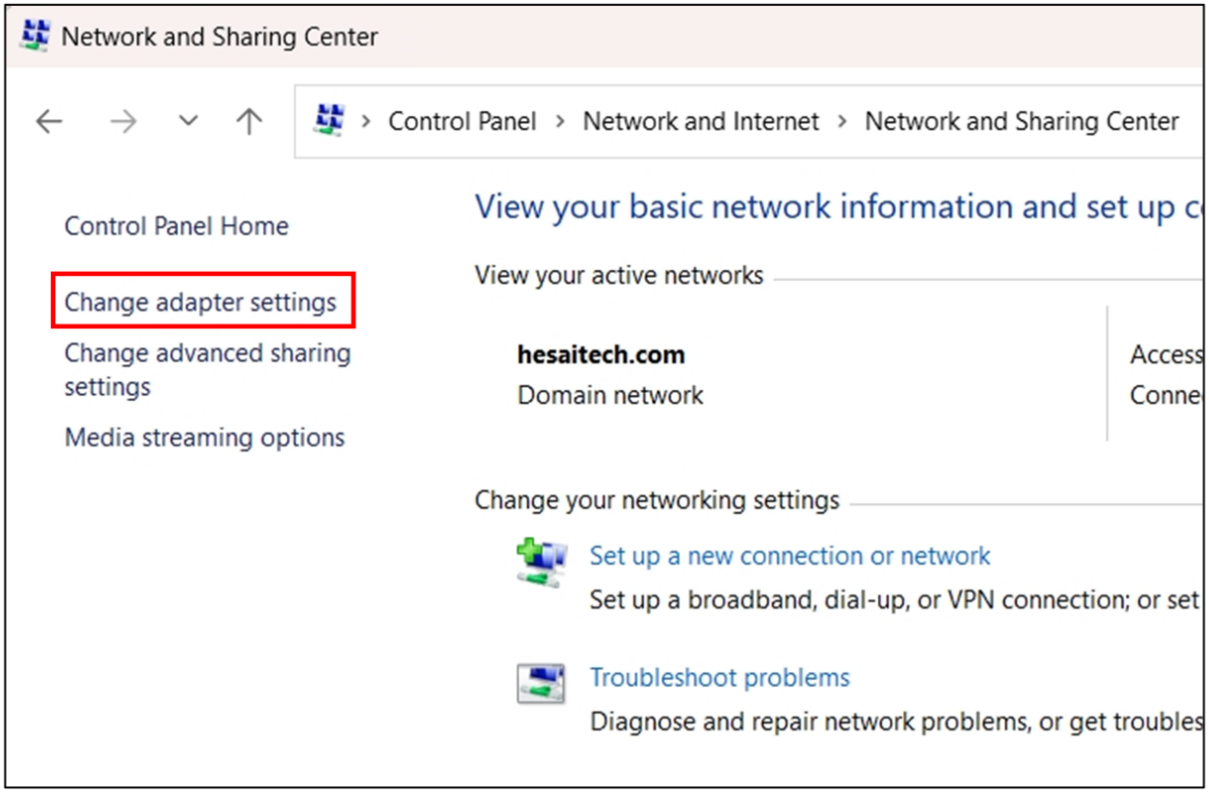


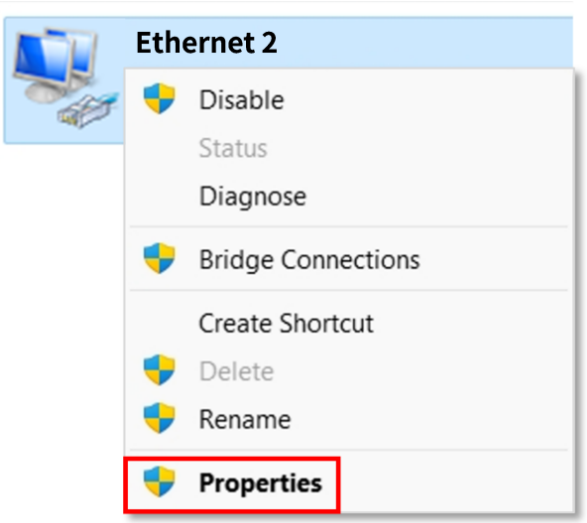

3. Double-click [ **Internet Protocol Version 4 (TCP/IPv4)** ].
4. Select [ **Use the following IP addresses** ] > Input the host computers's IP address and subnet mask.

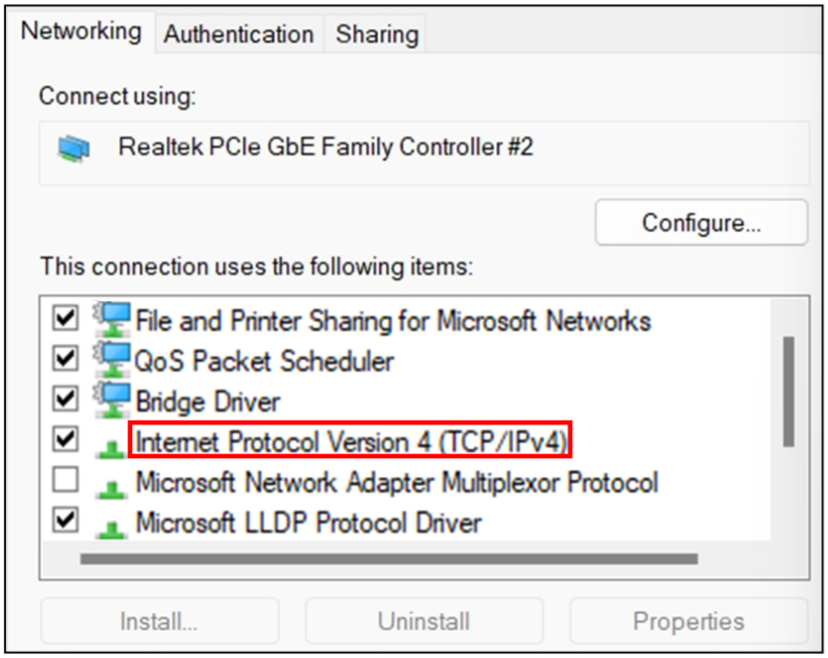


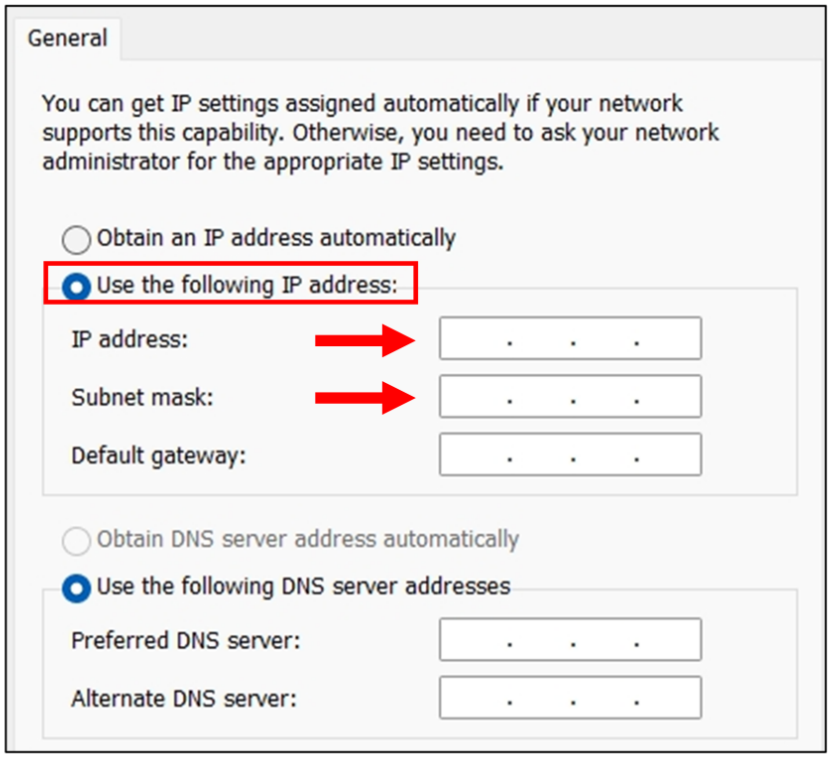


Ping command can be used to check the connection:

1. Press Win + R to open the Run dialog box.
2. Enter "cmd" and click [ **OK** ] to open the Command Prompt.
3. Enter "ping na" and check the output.

## 2.4.2 In Ubuntu

1. Find the host computer's network interface name.

   **Method 1**

   a. Open **Settings — Network**.
   b. Look for the interface whose status is "Connected".
   The name in parentheses after "Ethernet" is the network interface name.




   **Method 2**

   a. Open a terminal and run this command:

```
ifconfig
```

   b. Look for the interface with non-zero RX packets and bytes.
   (In the example below, **enp5s0** shows non-zero Rx packets and bytes, indicating active data transmission.)

```
❯ ifconfig
docker0: flags=4099<UP,BROADCAST,MULTICAST>  mtu 1500
        inet [redacted]  netmask [redacted]  broadcast [redacted]
        ether [redacted]  txqueuelen 0  (Ethernet)
        RX packets 0  bytes 0 (0.0 B)
        RX errors 0  dropped 0  overruns 0  frame 0
        TX packets 0  bytes 0 (0.0 B)
        TX errors 0  dropped 0 overruns 0  carrier 0  collisions 0

enp2s0f0: flags=4099<UP,BROADCAST,MULTICAST>  mtu 1500
        ether [redacted]  txqueuelen 1000  (Ethernet)
        RX packets 0  bytes 0 (0.0 B)
        RX errors 0  dropped 0  overruns 0  frame 0
        TX packets 0  bytes 0 (0.0 B)
        TX errors 0  dropped 0 overruns 0  carrier 0  collisions 0

enp5s0: flags=4099<UP,BROADCAST,MULTICAST>  mtu 1500
        ether [redacted]  txqueuelen 1000  (Ethernet)
        RX packets 267706980  bytes 300970909734 (300.9 GB)
        RX errors 0  dropped 0  overruns 0  frame 0
        TX packets 3184  bytes 590575 (590.5 KB)
        TX errors 0  dropped 0 overruns 0  carrier 0  collisions 0
```

2. Run this command in the terminal:

```
sudo ifconfig ${interface_name} ${ip_addr}
```

   - Replace `${interface_name}` with the host computer's network interface name.
   - Replace `${ip_addr}` with the host computer's IP address.

# 2.5 Network settings on the host computer (API communication)

To analyze the serial data from the lidar, follow the steps below.

## 2.5.1 Check the port numbers of the lidar

### In Windows

#### Method 1

1. Run this command:

```
mode
```

2. Plug and unplug the RS485 and UART cables in turn > Find out the serial port number of each ("COM" + number)

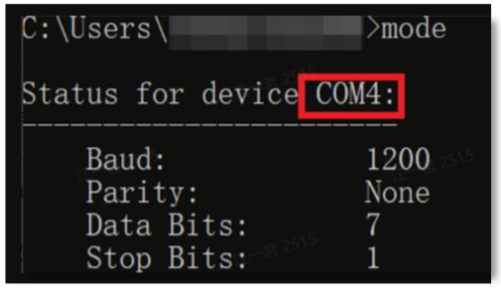

**Method 2**

1. Open File Explorer > Right-click **[ This PC ]** > **[ Manage ]**

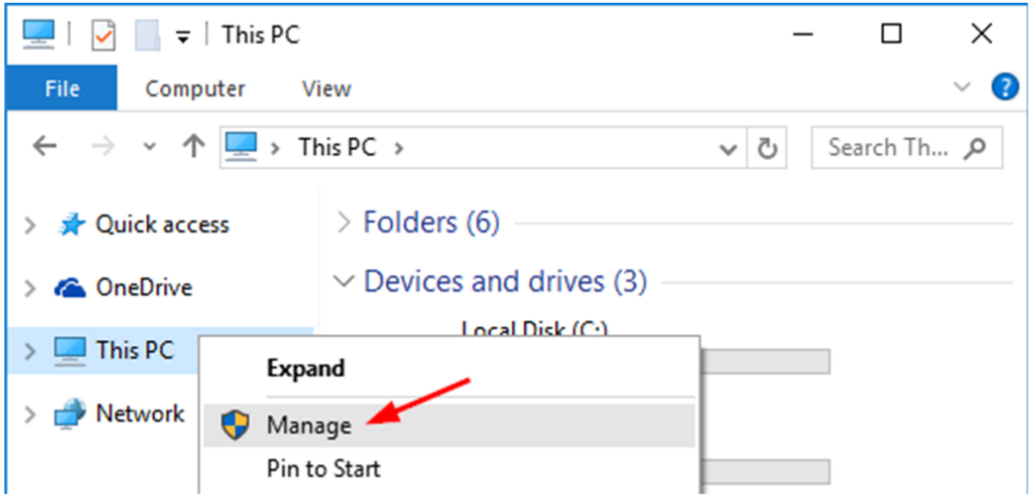


2. Click **[ Device Manager ]** on the side bar > Under your hostname, click **[ Ports (COM & LPT) ]**
3. In the list of ports, look for the RS485 port.
   Usually, the name of the RS485 port includes the chipset model of a USB-to-RS485 converter.

### In Ubuntu

1. Run this command in the terminal to check all the serial ports and their permissions.

```
ls -l /dev/ttyUSB*
```

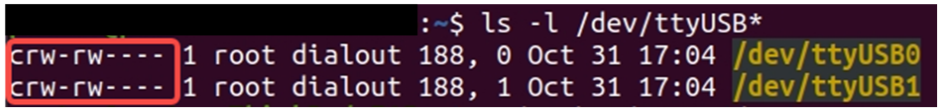


Figure 23. Disabled serial ports

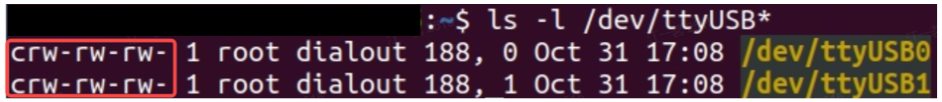


Figure 24. Enabled serial ports

2. If some serial ports are disabled, run this command to enable all the serial ports.

```
sudo chmod 666 /dev/ttyUSB*
```

> To check all the serial ports again, repeat Step 1.

3. Plug and unplug the lidar's RS485 and UART cables in turn so as to find out the serial port number of each ("/dev/ttyUSB" + number).
4. After plugging and unplugging, repeat Step 2 to gain read and write permissions again.

### 2.5.2 Check serial port data

Set these parameters in a serial port monitor:

- Serial port number for the lidar's RS485 communication
- Baud rate

## 2.6 Tools

- The following tools are supported by most models. Contact Hesai technical support to confirm applicability.
- For a customized model or an early prototype, contact Hesai technical support to confirm applicability.

| Tool | Purpose | Where to find it |
|---|---|---|
| PandarView 2 (point cloud visualization software) | To record and display point cloud data. | Public versions (for selected models only): https://www.hesaitech.com/downloads/ |
| LidarUtilities (software for host computers) | To set parameters, check device info and status, or upgrade firmware and software. | Contact Hesai technical support for details. |
| API | | Contact Hesai technical support to confirm the API applicable to this model and obtain the corresponding documentation. |
| Software development kits (SDKs) and ROS drivers | To assist development. | Public versions (for selected models only): https://github.com/HesaiTechnology |
| Web control | To set parameters, check device info and status, or upgrade firmware and software. | If this model supports web control, see the "Web Control" section of this manual. |

# 3 Data structure

Unless otherwise specified, all the multi-byte fields are unsigned values transmitted in little-endian format.

- Point Cloud Data Packet rate: 3000 Hz
- IMU Data Packet rate: 200 Hz

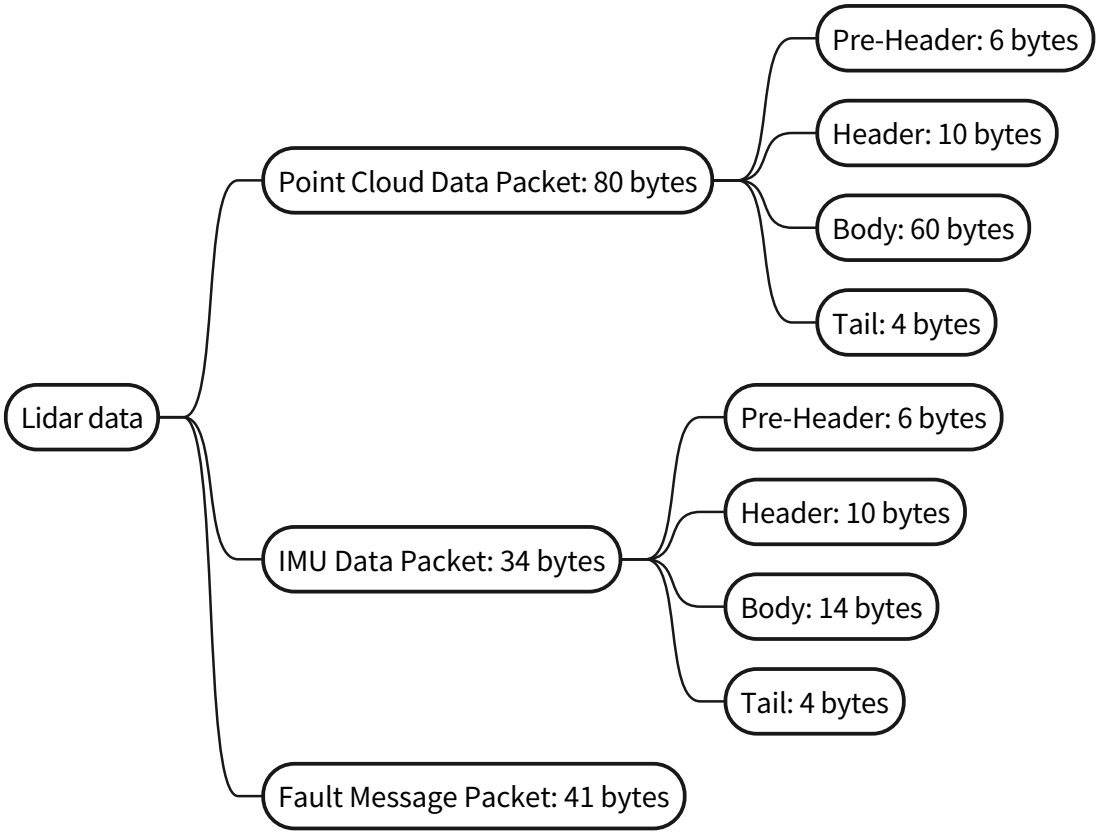


Figure 25. Data structure

# 3.1 Point Cloud and IMU Data Packets

## 3.1.1 Pre-Header

| Field | Byte(s) | Data type | Description |
|---|---|---|---|
| Start of Packet | 1 | uint8 | 0xEE |
| Start of Packet | 1 | uint8 | 0xFF |
| Protocol Version Major | 1 | uint8 | Main class of the point cloud UDP packet structure<br>Current value: 0x01 |
| Protocol Version Minor | 1 | uint8 | Subclass of the point cloud UDP packet structure<br>Current value: 0x08 |
| Reserved | 1 | - | - |
| Data Type | 1 | uint8 | 0 — For Point Cloud Packet<br>1 — For IMU Packet |

### 3.1.2 Header

<table>
<tr><th>Field</th><th>Byte(s)</th><th>Data type</th><th>Description</th></tr>
<tr><td>Date & Time</td><td>6</td><td>uint8[6]</td><td>Whole second part of the Coordinated Universal Time (UTC) of this data packet<table><tr><th>Each byte</th><th>Range (decimal)</th></tr><tr><td>Year (current year minus 1900)</td><td>⩾70</td></tr><tr><td>Month</td><td>1 to 12</td></tr><tr><td>Day</td><td>1 to 31</td></tr><tr><td>Hour</td><td>0 to 23</td></tr><tr><td>Minute</td><td>0 to 59</td></tr><tr><td>Second</td><td>0 to 59</td></tr></table></td></tr>
<tr><td>UTC Fractional Seconds</td><td>4</td><td>uint32</td><td>The microsecond part of the Coordinated Universal Time (UTC) of this data packet.<br><br>Unit: µs<br>Range: 0 to 999 999 µs (1 s)</td></tr>
</table>

### 3.1.3 Body

#### For Point Cloud Packet

| Field | Byte(s) | Data type | Description |
|---|---|---|---|
| Azimuth 1 | 2 | uint16 | Current reference angle of the azimuth<br>Unit: 0.01° |
| Block 1 | 48 | (uint16 + uint8)[16] | Measurements made by each channel (starting from Channel 1) (see Each channel in the block). |
| Cover Lens Contamination Level | 4 | uint8[4] | Bits [0:1], [2:3], ⋯, and [30:31] correspond to Channels 1 to 16, respectively.<br><br>From Level b-00 to Level b-11, the optical window becomes more contaminated. |
| Reserved | 1 | - | - |
| TDM ID | 1 | - | Time division multiplexing (TDM) ID |

<table>
<tr><th>Field</th><th>Byte(s)</th><th>Data type</th><th>Description</th></tr>
<tr><td>TDM Data</td><td>2</td><td>-</td><td>TDM data
<table>
<tr><th>TDM ID</th><th>TDM Data</th></tr>
<tr><td>0x00</td><td>Motor speed<br>Unit: 0.1 RPM</td></tr>
<tr><td>0x0F to 0x0C</td><td>Software version, in ASCII</td></tr>
<tr><td>0x13 to 0x10</td><td>Firmware version, in ASCII</td></tr>
<tr><td>0x19</td><td>Temperature headroom (Max. allowable temperature – current temperature)<br>Unit: 0.01°C</td></tr>
<tr><td>0x1C</td><td>IMU acceleration unit<br>Unit: 0.001mg<br>Supported software versions: 00.B0.C or above</td></tr>
<tr><td>0x1D</td><td>IMU angular velocity unit<br>Unit: 0.01 mdps<br>Supported software versions: 00.B0.C or above</td></tr>
</table>
For more details, see examples.</td></tr>
<tr><td>UDP Sequence</td><td>2</td><td>uint16</td><td>Sequence number of this UDP packet<br>Range: 0 to 0xFF FF</td></tr>
</table>

**Example: Software version**

| `TDM ID` | `TDM Data` in little-endian | ASCII |
|---|---|---|
| 0x0F | 0x30 30 | 00 |
| 0x0E | 0x2E 30 | .0 |
| 0x0D | 0x34 2E | 4. |
| 0x0C | 0x34 20 | 4 (trailing space emitted) |

Thus, the software version is "00.04.4". The firmware version can be analyzed similarly.

**Example: Temperature headroom**

| `TDM ID` | `TDM Data` in little-endian |
|---|---|
| 0x19 | 0x12 34 (4660) |

Thus, the temperature headroom is 46.6°C

**Each channel in the block**

<table>
<tr><th>Field</th><th>Byte(s)</th><th>Description</th></tr>
<tr><td>Channel 1</td><td>3</td><td>Measurements of Channel 1
<table>
<tr><th>Field</th><th>Byte(s)</th><th>Data type</th><th>Description</th></tr>
<tr><td>Distance</td><td>2</td><td>uint16</td><td>Object distance = <code>Distance</code> × 4 mm</td></tr>
<tr><td>Reflectivity</td><td>1</td><td>uint8</td><td>Range: 0 to 255<br>0 to 255 linearly represents target reflectivity 0 to 255%.<br>Reflectivity = <code>Reflectivity</code> Field × 1%</td></tr>
</table>
</td></tr>
</table>

| Field | Byte(s) | Description |
| --- | --- | --- |
| Channel 2 | 3 | Measurements of Channel 2 |
| … | … | … |
| Channel 16 | 3 | Measurements of Channel 16 |

**For IMU Packet**

<table>
<tr><th>Field</th><th>Byte(s)</th><th>Data type</th><th>Description</th></tr>
<tr><td>IMU X Axis Acceleration</td><td>2</td><td>int16</td><td>Acceleration of the X-axis.<table><tr><th>Software version</th><th>Unit</th></tr><tr><td>00.B0.C or above</td><td>See IMU acceleration unit</td></tr><tr><td>Other versions</td><td>(1/8192)g</td></tr></table></td></tr>
<tr><td>IMU Y Axis Acceleration</td><td>2</td><td>int16</td><td>Acceleration of the Y-axis.</td></tr>
<tr><td>IMU Z Axis Acceleration</td><td>2</td><td>int16</td><td>Acceleration of the Z-axis.</td></tr>
<tr><td>IMU X Axis Angular Velocity</td><td>2</td><td>int16</td><td>Angular velocity of the X-axis.<table><tr><th>Software version</th><th>Unit</th></tr><tr><td>00.B0.C or above</td><td>See IMU angular velocity unit</td></tr><tr><td>Other versions</td><td>(1/32.8) °/s</td></tr></table></td></tr>
<tr><td>IMU Y Axis Angular Velocity</td><td>2</td><td>int16</td><td>Angular velocity of the Y-axis.</td></tr>
<tr><td>IMU Z Axis Angular Velocity</td><td>2</td><td>int16</td><td>Angular velocity of the Z-axis.</td></tr>
<tr><td>IMU Sequence</td><td>2</td><td>uint16</td><td>Sequence number of this IMU packet<br>Range 0 to 0xFF FF</td></tr>
</table>

## 3.1.4 Tail

| Field | Byte(s) | Data type | Description |
| --- | --- | --- | --- |
| CRC | 4 | uint32 | CRC-32/MPEG-2 checksum of the packet (from Pre-Header to Body)<br>For IMU Data Packets, pad the CRC calculation range with two 0x00 bytes (to make it a smallest multiple of 4). Then, calculate the CRC. |

## 3.1.5 Point cloud data analysis method

Take **Channel 5** in **Block 1** as an example.

### Analyze the vertical angle of a data point

For the designed vertical angle of **Channel 5**, see Appendix A Channel distribution data.

- The accurate vertical angles are recorded in the angle correction file of this lidar; see Get the angle correction file.
- 0° is the horizontal direction. The upward direction is defined as positive; see Figure 4. Channel vertical distribution.

### Analyze the horizontal angle of a data point

Y-axis is the 0° position. The clockwise direction (in the top view) is defined as positive; see Figure 3. Lidar azimuthal position (top view).

Horizontal angle = ① + ②

① Azimuth of the current block (see the `Azimuth 1` field in Section 3.1.3 Body)
② Azimuth offset of the current firing channel (see Appendix A Channel distribution data)

The accurate azimuth offset is recorded in this lidar unit's angle correction file; see Get the angle correction file.

### Analyze the distance of a data point

See the `Distance` field of **Block 1: Channel 5** in Section 3.1.3 Body.

**Draw the data point in a spherical or rectangular coordinate system**

In a spherical coordinate system, the vertical and horizontal angles are defined in the figure below.

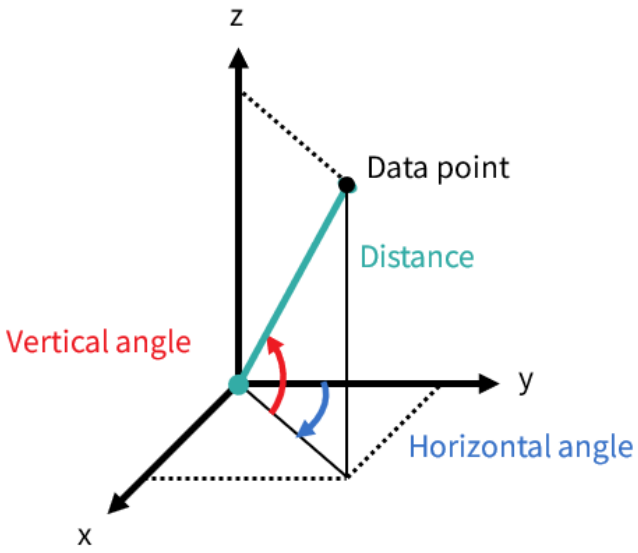


**Obtain the real-time point cloud data by analyzing and drawing every data point in each frame.**

## 3.2 Fault Message Packets

The lidar outputs Fault Message Packets with a transmission cycle of 1000 ms, including **Lidar States** and **Fault Codes** (see Appendix B Fault codes).

The application system can determine the existence and severity of faults and take safety measures accordingly.

| Field | Byte(s) | Data type | Description |
|---|---|---|---|
| Start of Packet | 1 | uint8 | Fixed: 0xEE |
| Start of Packet | 1 | uint8 | Fixed: 0xDD |
| FS Version | 1 | uint8 | Version number of the fault message data structure |
| Date & Time | 6 | uint8[6] | Absolute UTC of this data packet, accurate to the second<br>Each byte: Range (decimal)<br>Year (current year minus 1900): ⩾70<br>Month: 1 to 12<br>Day: 1 to 31<br>Hour: 0 to 23<br>Minute: 0 to 59<br>Second: 0 to 59 |
| UTC Fractional Seconds | 4 | uint32 | The microsecond part of the Coordinated Universal Time (UTC) of this data packet.<br>Unit: µs<br>Range: 0 to 999 999 µs (1 s) |

<table>
<tr><th>Field</th><th>Byte(s)</th><th>Data type</th><th>Description</th></tr>
<tr><td>Lidar State</td><td rowspan="3">1</td><td rowspan="3">uint8</td><td>d-0 (b-000) Normal<br>d-1 (b-001) Warning<br>d-2 (b-010) Shutdown<br><br>d-3 (b-011) Standby</td></tr>
<tr><td>Reserved</td><td></td></tr>
<tr><td>Rolling Counter</td><td>Indicates whether the fault reporting system gets stuck.<br>Starting from 0, the rolling counter increments by 1 every time the fault message is updated.<br>Range: 0 to 7</td></tr>
<tr><td>Total Fault Codes and Fault Code ID</td><td>1</td><td>uint8</td><td><table><tr><th>Bit</th><th>Description</th></tr><tr><td>[7:4] Total Fault Codes</td><td>Total number of fault codes in the buffer queue</td></tr><tr><td>[3:0] Fault Code ID</td><td>ID of the fault code being sent, indicating its position in the buffer queue, starting from 1</td></tr></table></td></tr>
<tr><td>Fault Code</td><td>2</td><td>hex16</td><td>The fault code sent by this data packet; see Appendix B Fault codes for details.</td></tr>
<tr><td>Reserved</td><td>20</td><td>-</td><td>-</td></tr>
<tr><td>CRC</td><td>4</td><td>-</td><td>CRC-32/MPEG-2 checksum of the packet (from Lidar State to Reserved)</td></tr>
</table>

# 4 Maintenance

The lidar's cover lens is made of plastic (polycarbonate, PC).

- Do NOT wipe the cover lens when it is dry, nor use abrasive cleaners. Doing so can damage the optical coating.
- Do NOT use organic cleaners, which can damage the cover lens and even cause cracking.
  - Organic cleaners include but are not limited to tar removers, self-cleaning agents, adhesive removers, coating removers, foam cleaners, iron powder removers for car paint, glass cleaners, thinning agents, de-icers, paint surface treatment agents, alcohol, and vinegar.
  - If organic cleaners may be present when cleaning the equipment or performing related operations, please protect the cover lens to prevent any contact with organic cleaners.
- Do NOT apply excessive force to the lidar, as this can damage the cover lens.
  - Using automatic cleaning devices that are not specifically designed for lidars may pose risks. Please contact Hesai technical support for assessment.
  - Do NOT use sharp objects (such as knives or metal tweezers) or hard brushes (such as stiff nylon brushes or wire brushes) to scratch the cover lens cover surface. Such actions may damage the cover lens surface, and in severe cases, may cause malfunction.
- After prolonged exposure to strong sunlight and high temperatures, the cover lens should NOT be cleaned immediately.
- If snow or ice accumulates on the cover lens, do NOT use a pressure washer or ice scraper.
  - A small broom is recommended to remove snow.
  - A solvent-free (i.e., free of organic solvents) ice removal spray is recommended to remove ice; alternatively, wait for the ice to melt by itself.
- Do NOT wax the cover lens.

Please regularly check on the cover lens, considering your use frequency, storage environment, and climate conditions.

- If foreign objects (such as dust, fingerprints, or oil stains) are found on the cover lens, make sure to clean them.
- If corrosive foreign objects (such as insect remains, bird droppings, tree resin, road dust, industrial dust, asphalt, soot particles, and road salt) are found on the cover lens, make sure to clean them immediately.

### Cleaning procedure

1. Make sure the lidar is powered OFF.
2. Choose an appropriate cleaning agent:
   - For light stains, use room temperature water.
   - For heavier stains, use a mild soap solution (no more than two tablespoons of soap per quart or liter of water).
   - For stubborn stains, use a solvent-free (i.e., free of organic solvents), pH-neutral detergent at room temperature, such as car shampoo.
3. Take a clean soft sponge or anti-static microfiber cloth, dampen it with the chosen cleaning agent, and gently wipe the dirty area on the cover lens back and forth.
4. For stubborn stains, cover the dirty area with the dampened sponge or cloth to soften the stains before wiping.
5. Immediately after removing the stains, rinse the cover lens with clean water. Then, use a clean soft sponge or microfiber cloth to gently wipe away any remaining liquid (which may contain residual cleaning agents or contaminants).

# 5 Troubleshooting

If the following procedures cannot solve your problem, please contact Hesai technical support.

| Symptoms | Points to check |
| --- | --- |
| Indicator light is off on the connection box. | Make sure that the following conditions are met:<br>• The power adapter is properly connected and in good condition.<br>• The connection box is intact.<br>• The input voltage and input current satisfy the requirements in Section 2.3 Connection box (optional).<br>Afterward, power on the lidar again and check if the symptom persists. |
| Motor is not running. | Make sure that the following conditions are met:<br>• The power adapter is properly connected and in good condition.<br>• The input voltage and input current satisfy the requirements in Section 1.5 Specifications.<br>• If a connection box is used, the connection box is intact.<br>Afterward, power on the lidar again and check if the symptom persists. |
| Motor is running, but no output data is received (neither by a serial port monitor software nor by PandarView 2). | Make sure that the following conditions are met:<br>• RS485 cable is properly connected, and the communication settings are correct.<br>• The lidar is emitting laser light; this can be confirmed using an infrared camera, an infrared sensor card, or a phone camera without an IR-cut filter.<br>Afterward, power on the lidar again and check if the symptom persists. |

| Symptoms | Points to check |
| --- | --- |
| Point cloud is abnormal, showing obviously misaligned points, flashing points, or incomplete FOV. | Make sure that the following conditions are met:<br>• The lidar's cover lens is clean. If not, refer to Section 4 Maintenance for the cleaning method.<br>• The lidar's angle correction file is applied (refer to PandarView 2 User Manual).<br>• Spin Rate is steady; this can be confirmed either by checking the `Motor Speed` field (if available) in Point Cloud Data Packets, or by using PandarView 2.<br>Afterward, check for packet loss.<br>If no packet is lost yet the point cloud flashes, try these steps:<br>1. Update PandarView 2 to the latest version (please contact Hesai technical support to obtain it).<br>2. Restart the computer.<br>If the point cloud is still abnormal, try these steps:<br>1. Connect the lidar to another computer, or use another RS485 to USB converter.<br>2. Power on again and check if the symptom persists. |
| The number of data packets received is abnormal, indicating missing packets. | 1. Connect the computer to no other devices but the lidar and check for packet loss.<br>2. Power on the lidar again and check if the symptom persists. |
| GNSS cannot be locked. | Make sure that the following conditions are met:<br>• GNSS receiver is properly connected.<br>• PPS signal is connected to the lidar.<br>• The GNSS signals satisfy the electrical requirements in Section 2.2 Electrical interface and Section 2.3 Connection box (optional).<br>Afterward, power on the lidar again and check if the symptom persists. |

# Appendix A: Channel distribution data

## Notes to the table

**Channel number** Counts from 1, bottom to top.

**Angular position** Design values of each channel's horizontal (azimuth) angle and vertical (elevation) angle.

- Vertical angles: Angles in space. For their projections onto the plane, see Figure 4.
- The accurate values are recorded in this lidar unit's angle correction file.
- To analyze point cloud data, refer to Section 3.1.5 Point cloud data analysis method.

| Channel No. | Angular position | |
|---|---|---|
| | Horiz. offset (°) | Vertical (°) |
| 1 | 193.49 | 0.01 |
| 2 | 193.56 | 2.68 |
| 3 | 193.53 | 5.41 |
| 4 | 193.56 | 8.09 |
| 5 | 193.64 | 10.73 |
| 6 | 193.67 | 13.39 |
| 7 | 193.73 | 16.04 |
| 8 | 193.82 | 18.71 |
| 9 | 188.10 | 21.37 |
| 10 | 188.08 | 24.02 |
| 11 | 188.21 | 26.69 |

| Channel No. | Angular position | |
|---|---|---|
| | Horiz. offset (°) | Vertical (°) |
| 12 | 188.20 | 29.35 |
| 13 | 188.23 | 32.01 |
| 14 | 188.26 | 34.70 |
| 15 | 188.29 | 37.42 |
| 16 | 188.31 | 40.21 |

# Appendix B: Fault codes

### Notes to the table

- The table is in the ascending order of fault codes.
- When multiple faults exist at the same time, Lidar State is consistent with the most severe fault.

| Fault | Fault code | Description | Lidar State | Solution |
|---|---|---|---|---|
| Cover lens contamination | 0x0104 | - | Warning | Clean the cover lens (see Section 4 Maintenance). |
| Lidar overtemperature | 0x0111 | Overtemperature at Position A inside the lidar | Shutdown | Check whether the environment temperature is too high. |
| Lidar overtemperature | 0x0112 | Overtemperature at Position B inside the lidar | Shutdown | Check whether the environment temperature is too high. |
| IMU operation abnormality | 0x0113 | - | Warning | Wait for 30 s; restart the lidar if the fault persists. |
| Inlet voltage abnormality | 0x0116 | - | Shutdown | Check the input voltage; restart the lidar when the input voltage becomes normal. |
| Lidar parameter abnormality | 0x0117 | - | Warning | Restart the lidar. |
| Motor overspeed/underspeed | 0x0210 | Scanning module abnormality (attempting self-recovery) | Warning | Wait for 120 s; restart the lidar if the fault persists. |
| Motor stall | 0x0211 | Scanning module abnormality (attempting self-recovery) | Shutdown | Wait for 120 s; restart the lidar if the fault persists. |
| Motor overcurrent | 0x0212 | Scanning module abnormality (attempting self-recovery) | Shutdown | Wait for 120 s; restart the lidar if the fault persists. |

| Fault | Fault code | Description | Lidar State | Solution |
|---|---|---|---|---|
| Encoder output abnormality | 0x0213 | Scanning module abnormality | Shutdown | Restart the lidar. |
| Encoder disk contamination | 0x0214 | Scanning module abnormality (attempting self-recovery) | Warning | Wait for 120 s; restart the lidar if the fault persists. |
| Boot failure | 0x0215 | - | Shutdown | Restart the lidar. |
| Low accuracy of PPS synchronization | 0x0406 | - | Warning | Check PPS signal source. |
| GNSS signal loss | 0x0407 | Time synchronization failed due to lack of GNSS signal. | Warning | Check GNSS signal source. |
| PPS signal loss | 0x0408 | Time synchronization failed due to lack of PPS signal. | Warning | Check PPS signal source. |
| GNSS signal abnormality | 0x0409 | - | Warning | Check GNSS signal source. |
| Eye safety fault | 0x0501 | All lasers are shut down due to eye safety risks. | Warning | Restart the lidar. |

# Appendix C: Legal notice

Copyright © 2017-2026 Hesai Technology Co., Ltd.
All rights reserved. Use or reproduction of this manual in parts or its entirety in any form or by any means without the written authorization of Hesai is prohibited.

Hesai Technology makes no representations or warranties, either expressed or implied, with respect to the contents hereof and specifically disclaims any warranties, merchantability, or fitness for any particular purpose. Further, Hesai Technology reserves the right to revise this publication and to make changes from time to time in the contents hereof without obligation to notify any person of such revisions or changes.

HESAI and HESAI logo are registered trademarks of Hesai Technology. All other trademarks, service marks, and company names in this manual or on Hesai's official website are properties of their respective owners.

The software included in this product contains copyright that is registered under Hesai Technology. Any third party is not permitted, except as expressly permitted by the licensor or expressly required by applicable law, to decompile, reverse engineer, disassemble, modify, rent, lease, loan, distribute, sublicense, create derivative works based on the whole or any part of the software.

Hesai Product Warranty Service Manual is on the Warranty Policy page of Hesai's official website: https://www.hesaitech.com/warranty-policy/

# Hesai Technology Co., Ltd.

Phone: +86 400 805 1233
Website: www.hesaitech.com
Address: Building A, Haisu Culture Plaza, Shanghai, China

Business Email: info@hesaitech.comService
Email: service@hesaitech.com